TI00105R/09/EN/16.20
71508879
2020-10-14



# Technical Information **Thermophant T TTR31, TTR35**

Temperature switch for safe measurement, monitoring and control of process temperatures

## Applications

Temperature switch for monitoring, display and control of process temperatures in the range of −50 to 200 °C (−58 to 392 °F):

- Thermophant T TTR31 - with threaded connections or compression fitting
- Thermophant T TTR35 - for hygienic applications

Applications:
- Versions for use in hygienic applications
- Electronic versions
  - one PNP switch output
  - two PNP switch outputs
  - 2x PNP switch outputs or one PNP switch output and 4 to 20 mA output (active)

## Your benefits

The compact temperature switch impresses with state-of-the-art technology:
- Integrated switching electronics for decentralized and cost-effective monitoring and control of processes
- High reproducibility and long-term stability
- Function check and information on site via LEDs and digital display
- Platinum temperature sensor with long-term stability (Pt100, Cl. A as per IEC 60751)
- High accuracy over the entire ambient temperature range and short response time
- Operation and visualization with PC and FieldCare configuration software
- Top housing section can be rotated 310°
- DESINA-compliant
- 3-A mark and EHEDG certification for TTR35

Endress+Hauser
People for Process Automation

# Table of contents


**Function and system design . . . 3**
Measuring principle . . . 3
Measuring system . . . 3

**Input . . . 5**
Measured variable . . . 5
Measuring range . . . 5

**Output . . . 5**
Output signal . . . 5
Signal on alarm . . . 5
Load . . . 5
Range of adjustment . . . 5
Switching capacity . . . 5
Inductive load . . . 5

**Power supply . . . 6**
Electrical connection . . . 6
Supply voltage . . . 7
Current consumption . . . 7

**Performance characteristics . . . 7**
Reference operating conditions . . . 7
Maximum measured error switch point and display . . . 7
Switch point non-reproducibility . . . 7
Long-term drift . . . 7
Sensor response time . . . 8
Long-term reliability . . . 8
Influence of ambient temperature . . . 8
Switch output response time . . . 8
Analog output . . . 8

**Installation . . . 9**
General installation instructions . . . 9
Installation instructions . . . 9

**Environment . . . 10**
Ambient temperature range . . . 10
Storage temperature . . . 10
Operating altitude . . . 11
Degree of protection . . . 11
Shock resistance . . . 11
Vibration resistance . . . 11
Electromagnetic compatibility (EMC) . . . 11
Electrical safety . . . 11

**Process . . . 11**
Process temperature range . . . 11
Process pressure range . . . 11

**Mechanical construction . . . 13**
Design, dimensions . . . 13
Design, dimensions of process connections . . . 13
Hygienic design, dimensions of process connections . . . 14
Weight . . . 15
Materials . . . 15

**Operability . . . 16**
Operating concept . . . 16
Local operation . . . 16
Remote operation with PC . . . 17

**Certificates and approvals . . . 18**
CE mark . . . 18
Other standards and guidelines . . . 18
UL approval . . . 19
Hygiene standard . . . 19
Materials in contact with food/product (FCM) . . . 19
Material certification . . . 19

**Ordering information . . . 19**

**Accessories . . . 20**
Device-specific accessories . . . 20
Communication-specific accessories . . . 21
System components . . . 22

**Supplementary documentation . . . 22**
Technical Information . . . 22
Operating Instructions . . . 22

# Function and system design

## Measuring principle

Electronic recording and conversion of input signals in industrial temperature measurement. A platinum sensor located at the measuring tip changes its resistance value depending on the temperature. This resistance value is recorded electronically. The relationship between resistance and temperature is defined in the international standard IEC 60751.

## Measuring system

### Overview

| Thermophant product family | TTR31 | TTR35 |
|---|---|---|
| | 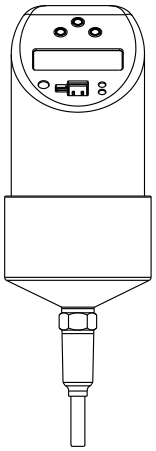 A0005276 | 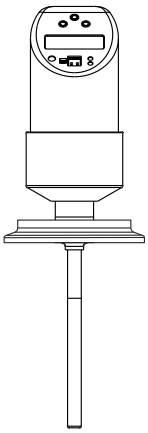 A0023194 |
| Sensor unit | Pt100 | Pt100 |
| Field of application | Measurement, monitoring and control of process temperatures. | Measurement, monitoring and control of process temperatures in hygienic processes. |
| Process connection | ▪ Compression fitting (sensor length ≥ 100 mm (3.94 in))<br>▪ Thread:<br>  ▪ G½" and G¼"<br>  ▪ ANSI NPT¼" and NPT½" | Hygiene:<br>▪ Conical metal-metal G½"<br>▪ Clamp 1" - 1½", 2"<br>▪ Varivent F, N<br>▪ DIN 11851<br>▪ APV Inline |
| Measuring range | −50 to 150 °C (−58 to 302 °F)<br>( −50 to 200 °C (−58 to 392 °F) with extension neck) | −50 to 150 °C (−58 to 302 °F)<br>( −50 to 200 °C (−58 to 392 °F) with extension neck) in hygienic processes |

**DC voltage version (DC)**

PNP switch output of electronics.

Power supply e.g. with a power supply unit.

Preferably in connection with programmable logic controllers (PLC) or for controlling a relay.

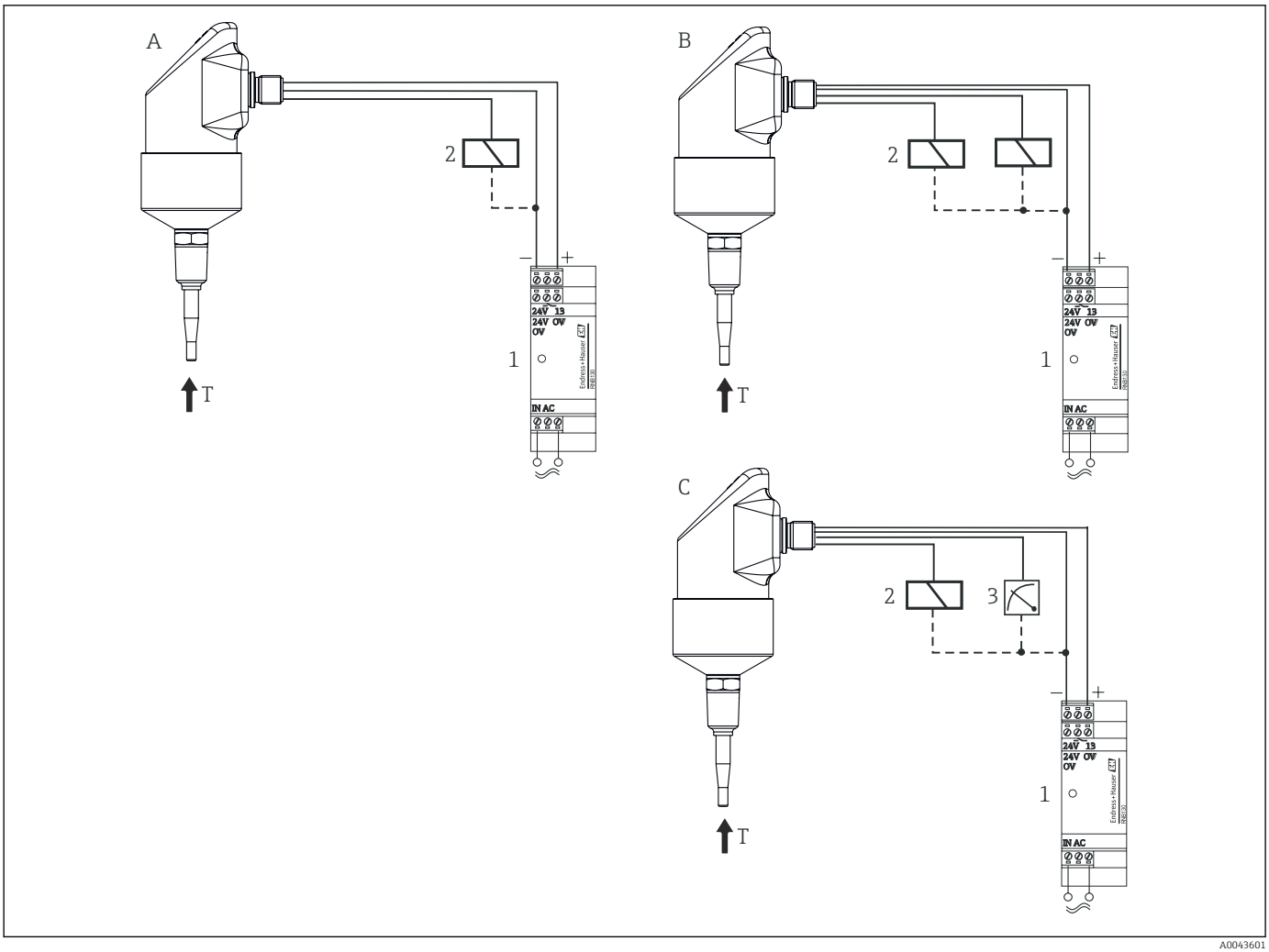


A0043601

*A 1x PNP switch output*
*B 2x PNP switch output*
*C PNP switch output with additional analog output 4 to 20 mA (active)*
*1 Transmitter power supply unit, e.g. RNB130*
*2 Load (e.g. programmable logic controller, process control system, relay)*
*3 Process indicator, e.g. RIA452 or recorder, e.g. Ecograph T (at 4 to 20 mA analog output)*

**1 "Easy Analog RNB130" transmitter power supply**
Primary switched-mode power supply for sensors. Space-saving DIN rail mounting as per IEC 60715. Wide-range input: 100 to 240 $V_{AC}$ nominal voltage; output: 24 $V_{DC}$, max. 30 V in the event of a fault;
Nominal current: 1.5 A. Connection to single-phase alternating current networks or to two phase conductors of three-phase supply networks.

**2 Process Indicator RIA452**
If you would like to read off the instantaneous temperature value not only locally, but also directly from a control room or in the PC network, for example, the RIA452 process indicator is one possible solution: digital process indicator in a 96 x 96 mm (3.78 x 3.78 in) panel-mounted housing for monitoring and displaying analog measured values with pump control and batch functions. Multicolored 7-digit 14-segment LC display with bargraph representation. Configuration and measured value visualization via RS232 interface and PC configuration software.

**3 Universal Graphic Data Manager Ecograph T**
If you would not only like to read off the instantaneous temperature value, but also record, analyze and display it directly in a control room or in the PC network, for example, then the following options are available:
Universal Graphic Data Manager Ecograph T in a 144 x 144 mm (5.67 x 5.67 in) panel-mounted housing for the electronic capture, display, recording, analysis, remote transmission and archiving of analog and digital input signals. Multichannel data recording system with multicolored TFT display (145 mm (5.7 in) screen size), galvanically isolated universal inputs (U, I, TC, RTD, pulse, frequency),

digital inputs, transmitter power supply, limit relays, communication interfaces (USB, Ethernet, optionally RS232/485), 128 MB internal memory, external SD card and USB stick. The Field Data Manager (FDM) software supports data analysis at the PC, the device can be configured with FieldCare or the integrated Web server.

# Input

**Measured variable**

Temperature (temperature-linear transmission behavior)

**Measuring range**

| Designation | Measuring range limits | Min. Span |
|---|---|---|
| Pt100 as per IEC 60751 | −50 to +150 °C (−58 to +302 °F)<br>−50 to +200 °C (−58 to +392 °F) with extension neck | 20 K (36 °F) |
| Sensor current: ≤ 0.6 mA | | |

# Output

**Output signal**

DC voltage version (short-circuit proof version):
- 1x PNP switch output
- 2x PNP switch outputs
- 1x PNP switch output or one PNP switch output and 4 to 20 mA output, active

**Signal on alarm**

- Analog output: ≤ 3.6 mA or ≥ 21.0 mA (if setting is ≥ 21.0 mA, output is ≥ 21.5 mA)
- Switch outputs: in safe state (switch open)

**Load**

Max. ($V_{power\ supply}$ - 6.5 V) / 0.022 A (current output)

**Range of adjustment**

| | |
|---|---|
| **Switch output** | Switch point (SP) and switchback point (RSP) in 0.1 °C (0.18 °F) increments. Minimum difference between SP and RSP: 0.5 °C (0.8 °F) |
| **Analog output (if available)** | Lower range value (LRV) and upper range value (URV) can be configured as required within the sensor range Min. Span 20 K (36 °F) |
| **Damping** | Can be configured as required: 0 to 40 s in increments of 0.1 s |
| **Unit** | °C, °F, K |

**Switching capacity**

DC voltage version:

| | |
|---|---|
| **Switch status ON** | Ia ≤ 250 mA |
| **Switch status OFF** | Ia ≤ 1 mA |
| **Switching cycles** | > 10,000,000 |
| **Voltage drop PNP** | ≤2 V |
| **Overload protection** | Switching current checked automatically; switched off in event of overcurrent, switching current checked again every 0.5 s; max. capacitive load: 14 µF for max. supply voltage (without resistive load); periodic disconnection from a protective circuit in event of overcurrent (f = 2 Hz) and "Warning" displayed |

**Inductive load**

To prevent electrical interference, only operate an inductive load (relays, contactors, solenoid valves) with a direct protective circuit (free-wheeling diode or capacitor).

# Power supply

## Electrical connection

### Plug connector

TTR35: According to the 3-A Sanitary Standard and EHEDG electrical connecting cables must be smooth, corrosion-resistant and easy to clean.

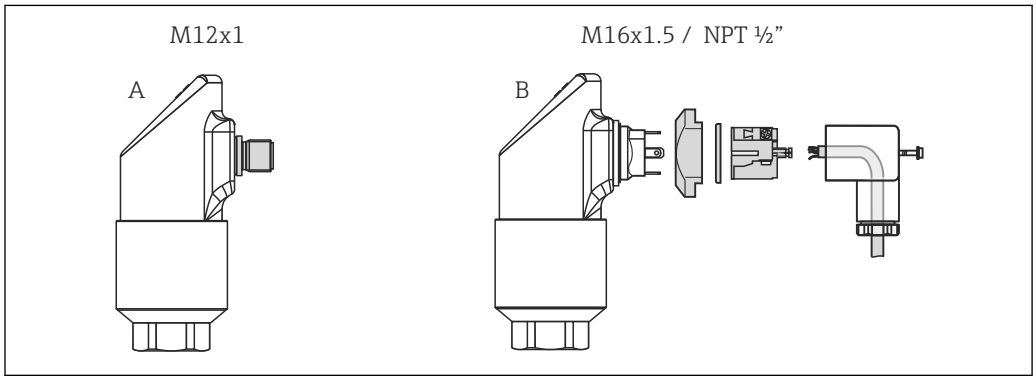


*A M12x1 connector*
*B Valve connector M16x1.5 or NPT ½"*

### Device connection

DC voltage version with M12x1 connector

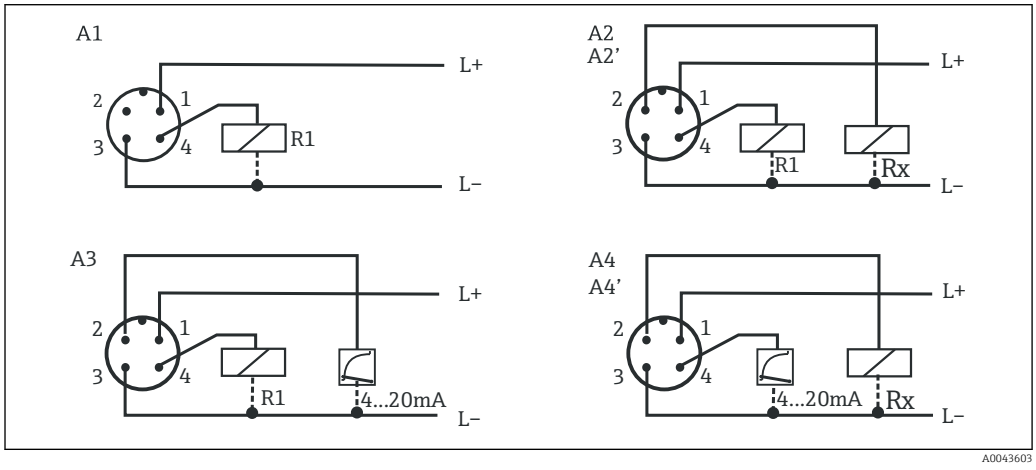


*1 Thermophant T with M12x1 connector*

| Item no. | Output setting |
|---|---|
| A1 | 1x PNP switch output |
| A2 | 2x PNP switch output R1 and Rx (R2) |
| A2’ | 2x PNP switch output R1 and Rx (diagnostics/NC contact with "DESINA" setting) |
| A3 | 1x PNP switch output and 1x analog output (4 to 20 mA) |
| A4 | 1x analog output (4 to 20 mA) and 1x PNP switch output Rx (R2) |
| A4’ | 1x analog output (4 to 20 mA) and 1x PNP switch output Rx (diagnostics/NC contact with "DESINA" setting) |

DC voltage version with M16x1.5 valve connector or NPT ½"

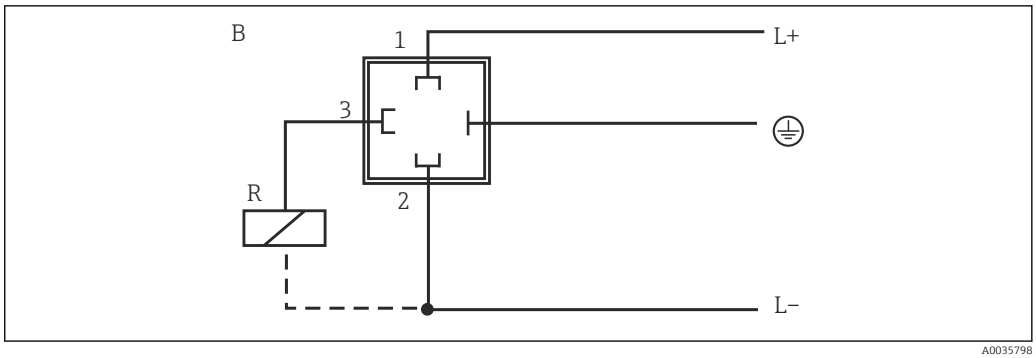


A0035798

| Item no. | Output setting |
|---|---|
| B | 1x PNP switch output |

**Supply voltage**

DC voltage version: 12 to 30 $V_{DC}$ (reverse polarity protection)

Behavior in case of overvoltage (> 30 V)
- The device works continuously up to 34 $V_{DC}$ without any damage
- No damage in the event of transient overvoltage up to 1 kV (according to EN 61000-4-5)
- If the supply voltage is exceeded, the specified characteristics are no longer guaranteed

Behavior in the event of undervoltage
If the supply voltage falls below the minimum value, the device switches off in a defined manner (status is the same as for not supplied with power = switch open).

The device may be powered only by a power supply unit that operates using a limited energy circuit in accordance with UL/EN/IEC 61010-1, Section 9.4 and the requirements in Table 18.

**Current consumption**

without load < 60 mA with reverse polarity protection

# Performance characteristics

The percentages in the "Performance characteristics" section refer to the nominal value of the sensor.

**Reference operating conditions**

As per DIN IEC 60770 or DIN IEC 61003
T = 25 °C (77 °F)
- Relative humidity 45 to 75%
- Ambient air pressure860 to 1 060 kPa (124 to 153 psi), using water as the test medium
- Supply voltage U = 24 $V_{DC}$

**Maximum measured error switch point and display**

**Electronics**

0.2 K (0.36 °F)

**Sensor**
- Tolerance class A as per IEC 60751, −50 to +200 °C (−58 to +392 °F)
- Maximum measured error in °C = ± 0.15 + 0.002 · |T|

|T| = Process temperature in °C without taking the sign into account.

**Total error**

Total error = electronics error + sensor error, e.g. for process temperatures:

- −50 to +75 °C (−58 to +167 °F) ≤ 0.5 K (0.9 °F)
- +75 to +200 °C (+167 to +392 °F) ≤ 0.75 K (1.35 °F)

**Switch point non-reproducibility**

0.1 K (0.18 °F)as per EN 61298-2 (without ambient temperature effect)

**Long-term drift**

≤ 0.1 K (0.18 °F) per year under reference conditions

**Sensor response time**

Measured in accordance with IEC 60751 with 0.4 m/s (1.3 ft/s) in flowing water100 ms

| $t_{50}$ | $t_{90}$ |
|---|---|
| < 1.0 s | < 2.0 s |

**Long-term reliability**

Mean time between failure (MTBF) > 100 years

(calculated according to the "British Telecom Handbook of Reliability Data No. 5")

**Influence of ambient temperature**

- Switch output and display: ≤ 30 ppm/K
- Analog output: ≤ 50 ppm/K + influence of switch output and display

**Switch output response time**

100 ms

**Analog output**

| | |
|---|---|
| **Maximum measured error** | Switch point and display deviation + 0.1% |
| **Rise time $t_{90}$** | ≤200 ms |
| **Settling time $t_{99}$** | ≤500 ms |

# Installation

**General installation instructions**

- Any orientation
- Top housing section can be rotated 310°
- No restrictions. However, self-draining in the process must be guaranteed. If there is an opening to detect leaks at the process connection, this opening must be at the lowest possible point.

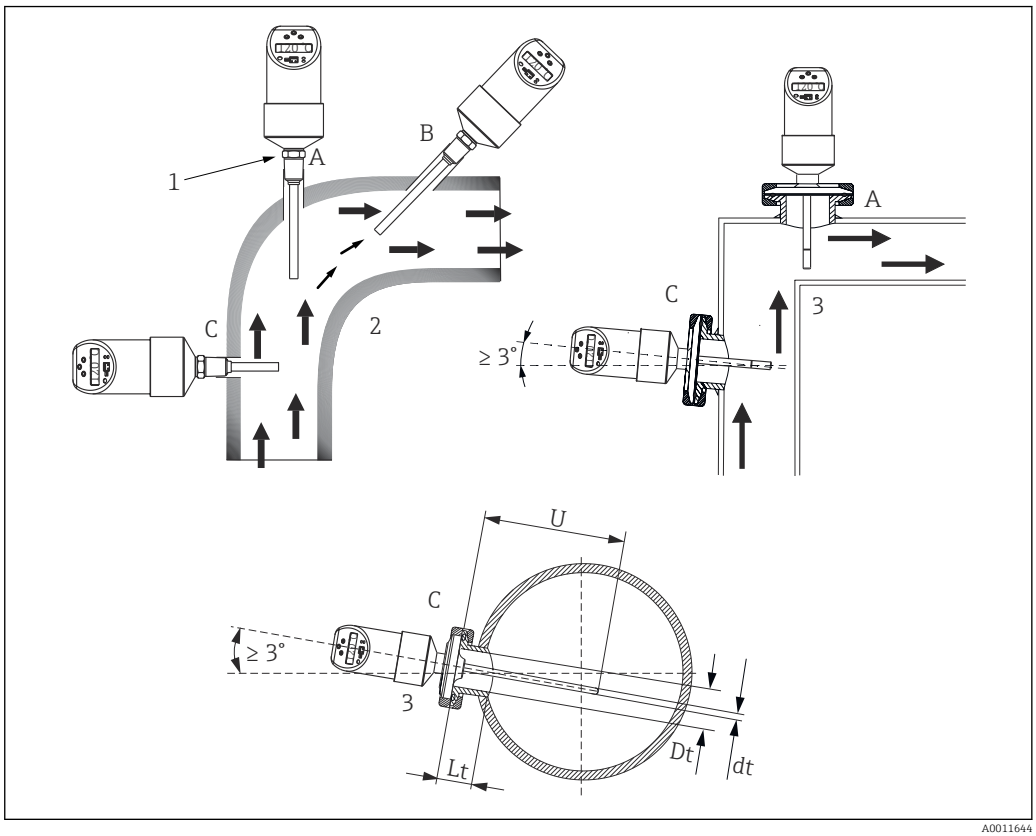


*2 Installation options for temperature monitoring in pipelines*

*1 Hexagonal screw of sensor module*
*2 TTR31*
*3 TTR35 for use in hygienic processes*

**Installation instructions**

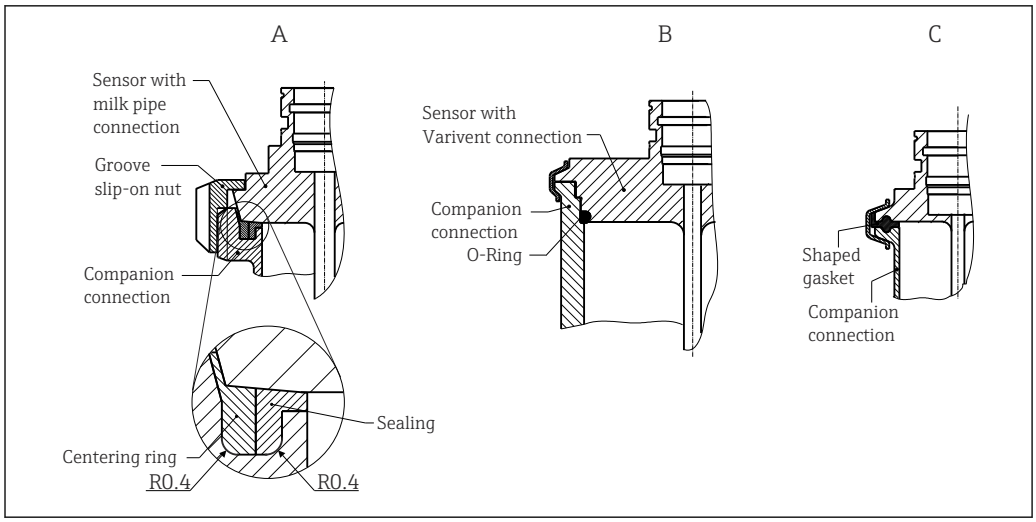


*3 Detailed installation instructions for hygiene-compliant installation*

*A Milk pipe connection according to DIN 11851 (PL, PG, PH connection), only in conjunction with EHEDG-certified and self-centering sealing ring*
*B Varivent® and APV-Inline (LB, LL, HL connection)*
*C Clamp as per ISO 2852 (DB, DL connection), EHEDG-certified only in conjunction with seal as per EHEDG position paper*

The requirements of the EHEDG and the 3-A Sanitary Standard must be adhered to.

Installation instruction EHEDG/cleanability: Lt ≤ (Dt-dt)

Installation instruction 3-A/cleanability: Lt ≤ 2 (Dt-dt)

In the case of weld-in connections, exercise the necessary degree of care when performing the welding work on the process side:

1. Use suitable welding material.
2. Flush-weld or weld with welding radius ≥ 3.2 mm (0.13 in).
3. Avoid crevices, folds or gaps.
4. Ensure the surface is honed and polished, Ra ≤ 0.76 µm (30 µin).

Pay attention to the following when installing the thermometer to ensure that the cleanability is not affected:

1. The installed sensor is suitable for CIP (cleaning in place). Cleaning is carried out in combination with tubing/piping or tank/vessel. In the case of internal tank fixtures using process connection nozzles, it is important to ensure that the cleaning assembly sprays this area directly so that it is cleaned properly.
2. The Varivent® connections enable flush-mounted installation.

NOTICE

**The following action must be taken if a sealing ring (O-ring) or seal fails:**

- The thermometer must be removed.
- The thread and the O-ring joint/sealing surface must be cleaned.
- The sealing ring or seal must be replaced.
- CIP must be performed after installation.

# Environment

| | |
|---|---|
| **Ambient temperature range** | −40 to +85 °C (−40 to +185 °F) |
| **Storage temperature** | −40 to +85 °C (−40 to +185 °F) |

**Operating altitude**

Up to 4 000 m (13 123.36 ft) above sea level

**Degree of protection**

| | |
|---|---|
| **IP65** | M16 x 1.5 or NPT ½", valve connector |
| **IP66** | M12 x 1 connector |

**Shock resistance**

50 g as per DIN IEC 68-2-27 (11 ms)

**Vibration resistance**

- 20 g as per DIN IEC 68-2-6 (10-2000 Hz)
- 4 g as per marine approval

**Electromagnetic compatibility (EMC)**

CE conformity

Electromagnetic compatibility in accordance with all the relevant requirements of the IEC/EN 61326 series and NAMUR Recommendation EMC (NE21). For details refer to the EU Declaration of Conformity.

Maximum measured error <1% of measuring range.

Interference immunity as per IEC/EN 61326 series, industrial requirements.

Interference emission to IEC/EN 61326 - series, electrical equipment Class B.

**Electrical safety**

- Protection class III
- Overvoltage category II
- Pollution level 2

# Process

**Process temperature range**

−50 to +150 °C (−58 to +302 °F)( or −50 to +200 °C (−58 to 392 °F) with extension neck).

Restrictions depending on process connection and ambient temperature:

- No restriction with compression fitting (see Accessories, order no. 51004751, 51004753) and extension neck length min. 20 mm (0.79 in)
- with process connection:

| Max. ambient temperature | Max. process temperature |
|---|---|
| up to 25 °C (77 °F) | No restrictions |
| up to 40 °C (104 °F) | 135 °C (275 °F) |
| up to 60 °C (140 °F) | 120 °C (248 °F) |
| up to 85 °C (185 °F) | 100 °C (212 °F) |

**Process pressure range**

Maximum permitted process pressure depending on the insertion length

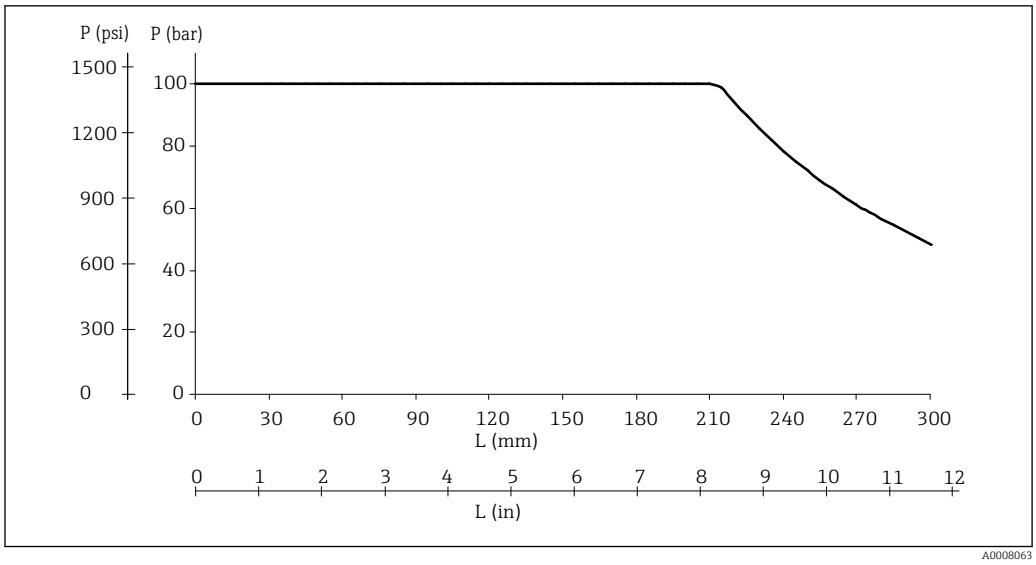


*4 Maximum permitted process pressure*

*L Insertion length*
*p Process pressure*

The diagram takes into consideration not only the overpressure but also the compressive load caused by flow, wherein a safety factor of 1.9 has been applied for operation with flow. Due to the increased bending stress caused by flow, the maximum permitted static operating pressure is lower in the case of longer insertion lengths.

This calculation is based on the maximum permitted flow velocity for the respective insertion length (see diagram below) .

The maximum process pressure for the conical metal-metal process connection for hygienic processes (MB option) for the device is 1.6 MPa = 16 bar (232 psi).

**Permitted flow velocity depending on the insertion length**

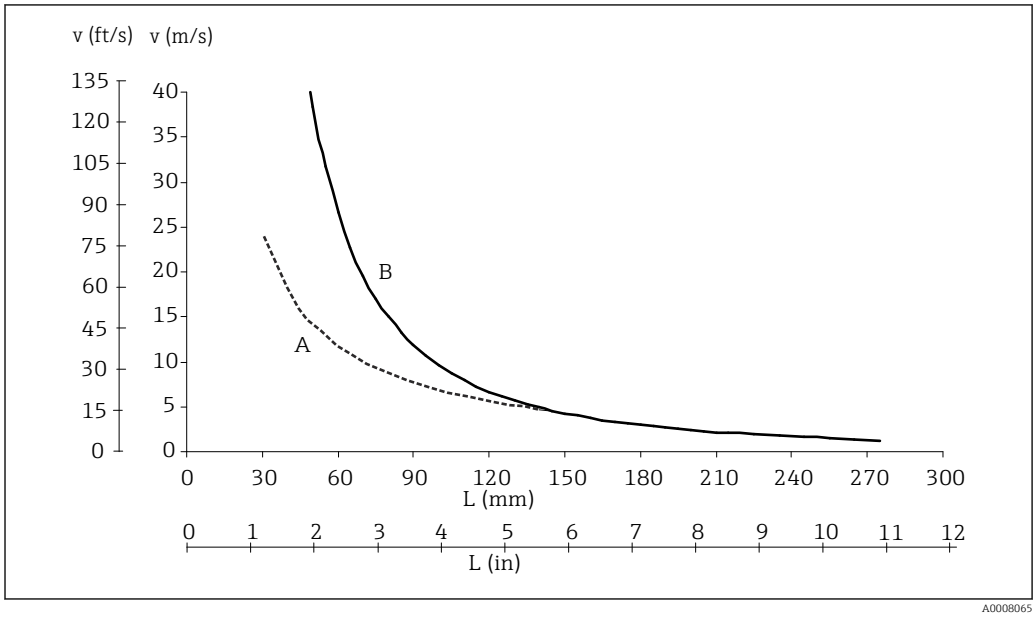


*5 Permitted flow velocity*

*A Water*
*B Air*
*L Insertion length, during flow*
*v Flow velocity*

The permitted flow velocity is the minimum defined by the resonance velocity (resonance distance 80%) and stress or buckling caused by flow, which would lead to failure of the thermometer tube or to the safety factor (1.9) being exceeded. The calculation was performed for the specified limit operating conditions of 200 °C (392 °F) and ≤ 100 bar (1 450 psi) process pressure.

# Mechanical construction

**Design, dimensions**

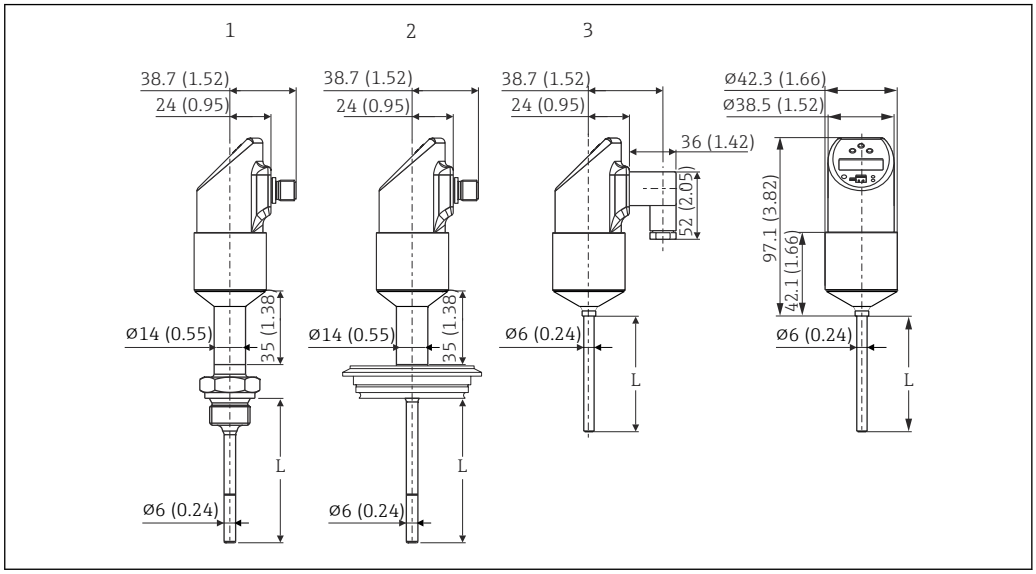


*All dimensions in mm (in)*

1 *Temperature switch with extension neck and M12x1 connector according to IEC 60947-5-2*

2 *Temperature switch (hygiene version) with extension neck and M12x1 connector according to IEC 60947-5-2*

3 *Valve connector M16x1.5 or NPT½" as per DIN 43650A/ISO 4400*

L *Insertion length*

**Design, dimensions of process connections**

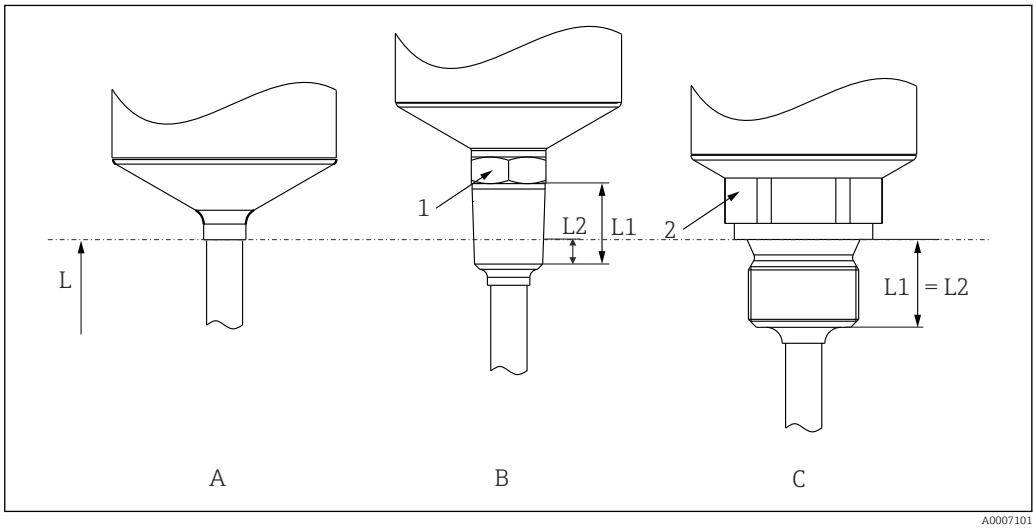


*6 Process connection versions*

L *Insertion length*

| Item No. | Version | Thread length $L_1$ | Screw-in length $L_2$ |
|---|---|---|---|
| A | Without process connection. Suitable welding bosses and compression fittings. → 📄 20 | - | - |
| B | Threaded process connection:<br>▪ ANSI NPT ¼" (1 = AF14)<br>▪ ANSI NPT ½" (1 = AF27) | ▪ 14.3 mm (0.56 in)<br>▪ 19 mm (0.75 in) | ▪ 5.8 mm (0.23 in)<br>▪ 8.1 mm (0.32 in) |
| C | Threaded process connection, inches, cylindrical as per ISO 228:<br>▪ G¼" (2 = AF14)<br>▪ G½" (2 = AF27) | ▪ 12 mm (0.47 in)<br>▪ 14 mm (0.55 in) | - |

## Hygienic design, dimensions of process connections

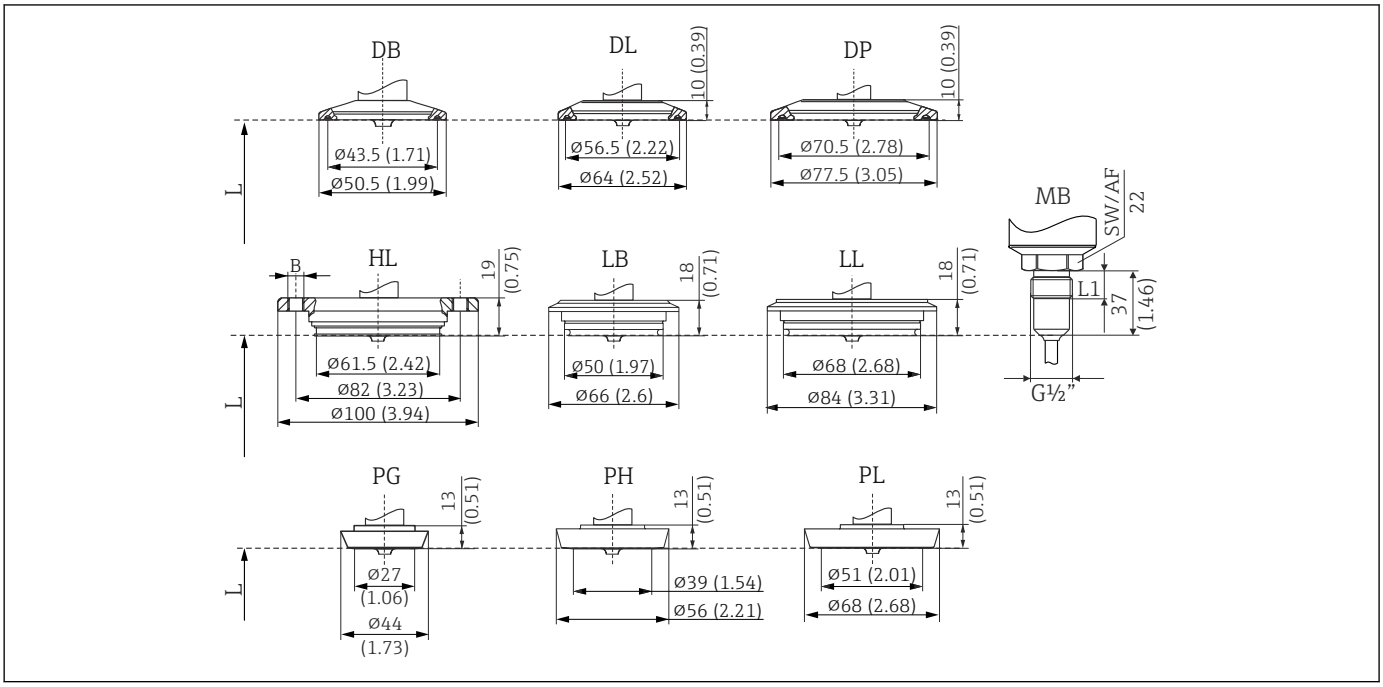


A0023235

*7 Process connection versions*

*All dimensions in mm (in).*
*L Insertion length L*

| Item no. | Process connection versions, hygiene version | Hygiene standard |
|---|---|---|
| DB | Clamp 1" to 1½" (ISO 2852) or DN 25 to DN 40 (DIN 32676) | 3-A marked and EHEDG certified (combined with Combifit seal). |
| DL | Clamp 2" (ISO 2852) or DN 50 (DIN 32676) | |
| DP | Clamp 2½" (ISO 2852) | |
| HL | APV Inline, DN50, PN40, 316L, B = bores 6 x Ø8.6 mm (0.34 in) + 2 x M8 thread | With 3-A symbol and EHEDG certification |
| LB | Varivent [1)] F DN25-32, PN 40 | |
| LL | Varivent [1)] N DN40-162, PN 40 | |
| MB | Metal sealing system for hygienic processes, G½" thread, thread length<br>L1 = 14 mm (0.55 in). Suitable welding boss available as an accessory. | - |

| Item no. | Process connection versions, hygiene version | Hygiene standard |
|---|---|---|
| PG | DIN 11851, DN25, PN40 (including coupling nut) | 3-A marked and EHEDG certified (only in combination with self-centering seal according to EHEDG position paper) |
| PH | DIN 11851, DN40, PN40 (including coupling nut) | |
| PL | DIN 11851, DN50, PN40 (including coupling nut) | |

1) Varivent® process connections are suitable for installation in VARINLINE® housing connection flanges.

The VARINLINE® housing connection flange is suitable for welding into the conical or torispherical head in tanks or vessels with a small diameter (≤ 1.6 m (5.25 ft)) and up to a wall thickness of 8 mm (0.31 in). The Varivent type F cannot be used for installations in pipes in combination with the VARINLINE housing connection flange.

**Weight**

approx. 300 g (10.58 oz), depends on process connection and sensor length

**Materials**

- Process connection AISI 316L
  Surfaces in contact with the process in hygienic version with surface quality Ra ≤ 0.76 µm (30 µin)
- Coupling nut AISI 304
- AISI 316L housing, with surface quality $R_a$ ≤ 0.76 µm (30 µin)
  O-ring between housing and sensor module: EPDM
- Electrical connection
  - M12 connector, exterior AISI 316L, interior polyamide (PA)
  - Valve connector, polyamide (PA)
  - M12 connector, exterior 316L
  - Cable sheath polyurethane (PUR)
  - O-ring between electrical connection and housing: FKM
- Display, polycarbonate PC-FR (Lexan®)
  Seal between display and housing: SEBS THERMOPLAST K®
  Keys, polycarbonate PC-FR (Lexan®)

# Operability

**Operating concept**

Position of the display and operating elements

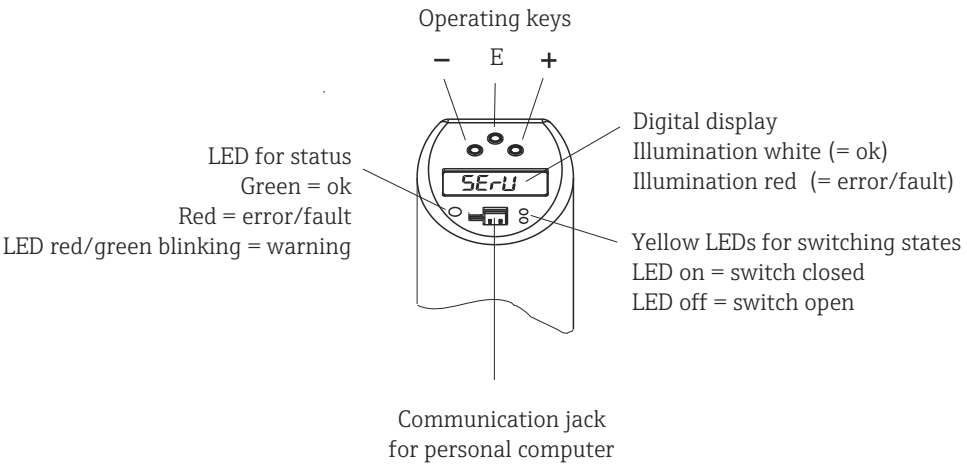


A0020825-EN

To prevent damage to the keys, do not operate them with a pointed object!

**Local operation**

Menu-guided operation using operating keys.

| Function group | Operating options |
|---|---|
| BASE<br>(basic functions) | Selection of unit: °C, °F, K |
| | Zero point, offset (automatic and manual) |
| | Damping display value, output signal: from 0 to 40 s (in 0.1 s increments), as required |
| | Display<br>▪ Display measured value or set switch point<br>▪ Rotate display by 180°<br>▪ Switch off display |
| | Behavior in accordance with DESINA (with 2 outputs only):<br>The PIN assignment of the M12 connector is in accordance with DESINA guidelines (DESINA = distributed and standardized installation technology for machine tools and manufacturing systems) |
| OUT (configuration of 1st output) and OUT2 (configuration of 2nd output, only for corresponding electronics version) | Switch output function:<br>▪ Hysteresis or window function<br>▪ NC contact or NO contact (see the following diagram)<br>▪ Analog output 4 to 20 mA |
| | Switch point:<br>▪ Input value<br>▪ Accept present value<br>Switch point from 0.5 to 100% URL (in 0.1 % increments), as required |
| | Switchback point:<br>▪ Input value<br>▪ Accept present value<br>Switchback point from 0.5 to 99.5% URL (in 0.1 % increments), as required |
| | Switch output delay: can be configured as required from 0 to 99 s (in 0.1 s increments) |

| Function group | Operating options |
|---|---|
| 4-20<br>(configuration of analog output, only for corresponding electronic version) | Lower range value (LRV) and upper range value (URV) of analog output:<br>▪ Input value<br>▪ Accept present value |
| | Setting of failure current: choice of ≤3.6 mA / ≥ 21 mA / last current value |
| SERV<br>(service functions) | Reset all settings to factory setting |
| | Preset locking code |
| | Locking |
| | Static revision counter, incremented each time the configuration is changed |
| | Display of last error to occur |
| | Simulation of switch output 1, switch output 2 and analog output |
| | Display of max. measured temperature value |
| | Display of min. measured temperature value |

Functions of the switch point
- Hysteresis function:
  The hysteresis function enables two-point control via a hysteresis. Depending on the temperature, the hysteresis can be set via the switch point SP and the switchback point RSP.
- Window function:
  The window function allows a process window to be defined.
- NO contact or NC contact:
  This switch function can be selected as required.
- Delay times for switch point SP and switchback point RSP can be configured in increments of 1 s. This makes it possible to filter out undesired temperature peaks of short duration or of high frequency

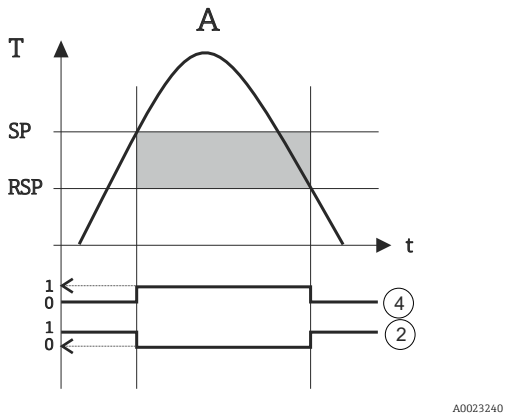


*8 Switch point functions*

*A Hysteresis function*
*B Window function*
*1 Window - NC contact*
*2 Hysteresis - NC contact*
*3 Window - NO contact*
*SP Switch point*
*RSP Switchback point*

**Remote operation with PC**

Operation, visualization and maintenance with PC and PC configuration software ReadWIN 2000 or FieldCare.

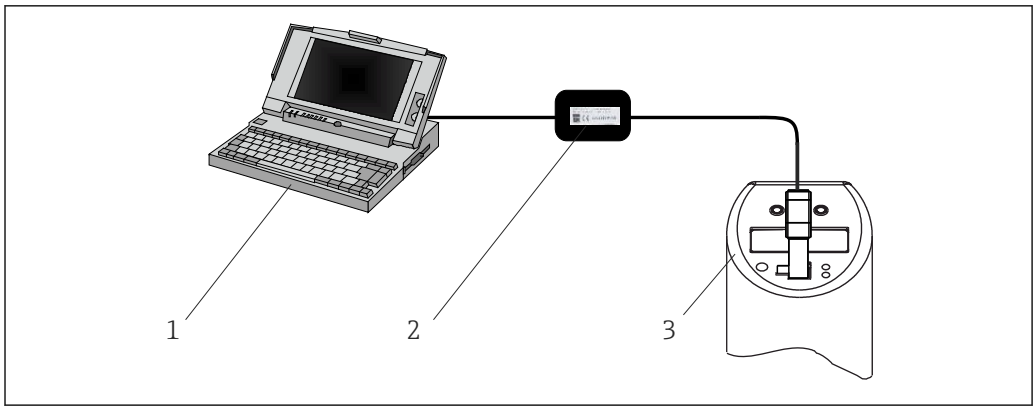


*9 Operation, visualization and maintenance with PC and configuration software*

*1 PC with ReadWin 2000 or FieldCare configuration software*
*2 Configuration kit TXU10-AA or FXA291 → 20*
*3 Temperature switch*

In addition to the operating options listed in the previous "Local operation" section, further information regarding the Thermophant T is available via the ReadWin 2000 or FieldCare configuration software:

| Function group | Description |
|---|---|
| SERV | Number of switch changes, output 1 |
| | Number of switch changes, output 2 |
| | Device status |
| INFO | Tagging, 18-digit |
| | Order code |
| | Device serial number |
| | Sensor serial number |
| | Electronics serial number |
| | Displays overall version |
| | Hardware version |
| | Software version |

# Certificates and approvals

**CE mark**

The product meets the requirements of the harmonized European standards. As such, it complies with the legal specifications of the EC directives. The manufacturer confirms successful testing of the product by affixing to it the CE-mark.

**Other standards and guidelines**

- IEC 60529:
  Degrees of protection provided by enclosures (IP code)
- IEC/EN 61010-1:
  Protection Measures for Electrical Equipment for Measurement, Control, Regulation and Laboratory Procedures
- IEC/EN 61326 series:
  Electromagnetic compatibility (EMC requirements)
- NAMUR:
  International user association of automation technology in process industries (www.namur.de)
- NEMA:
  United States National Electrical Manufacturers Association.

| | |
|---|---|
| **UL approval** | More information under UL Product iq™, search for keyword "E225237") |
| **Hygiene standard** | ▪ EHEDG certification, type EL CLASS I. EHEDG certified/tested process connections → 🗎 13<br>▪ 3-A Authorization No. 1144, 3-A Sanitary Standard 74-07. Listed process connections → 🗎 13<br>▪ FDA-compliant |
| **Materials in contact with food/product (FCM)** | The materials of the thermometer in contact with food/product (FCM) comply with the following European regulations:<br>▪ (EC) No. 1935/2004, Article 3, Paragraph 1, Articles 5 and 17 on materials and articles intended to come into contact with food.<br>▪ (EC) No. 2023/2006 on good manufacturing practice (GMP) for materials and articles intended to come into contact with food.<br>▪ (EC) No. 10/2011 on plastic materials and articles intended to come into contact with food.<br>▪ All surfaces in contact with the medium are free from materials derived from bovine animals or other livestock (ADI/TSE) |
| **Material certification** | The material certificate 3.1 (according to standard EN 10204) can be requested separately. The "short form" certificate includes a simplified declaration with no enclosures of documents related to the materials used in the construction of the single sensor and guarantees the traceability of the materials through the identification number of the thermometer. The data related to the origin of the materials can subsequently be requested by the client if necessary. |

# Ordering information

Detailed ordering information is available for your nearest sales organization www.addresses.endress.com or in the Product Configurator under www.endress.com :

1. Click Corporate
2. Select the country
3. Click Products
4. Select the product using the filters and search field
5. Open the product page

The Configuration button to the right of the product image opens the Product Configurator.

**Product Configurator - the tool for individual product configuration**
- Up-to-the-minute configuration data
- Depending on the device: Direct input of measuring point-specific information such as measuring range or operating language
- Automatic verification of exclusion criteria
- Automatic creation of the order code and its breakdown in PDF or Excel output format
- Ability to order directly in the Endress+Hauser Online Shop

# Accessories

## Device-specific accessories

### Welding boss with sealing taper

- Collar welding boss movable with sealing taper, washer and pressure screw G½"
- Material of parts in contact with the process: 316L, PEEK,
- Max. process pressure 10 bar (145 psi)
- Order number with pressure screw 51004751
- Order number without pressure screw 51004752

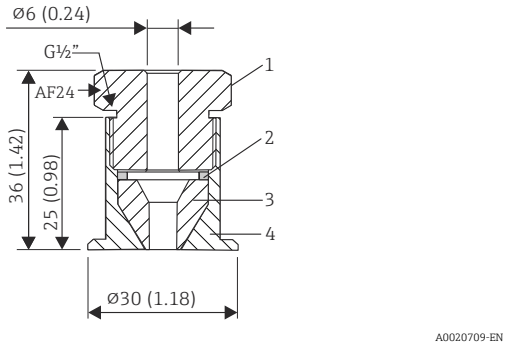


*10 Dimensions in mm (in)*

*1 Pressure screw, 303/304*
*2 Washer, 303/304*
*3 Sealing taper, PEEK*
*4 Collar welding boss, 316L*

### Collar welding boss

- Collar welding boss movable with sealing taper and washer
- Material of parts in contact with the process: 316L, PEEK
- Max. process pressure 10 bar (145 psi)
- Order number without pressure screw: 51004752

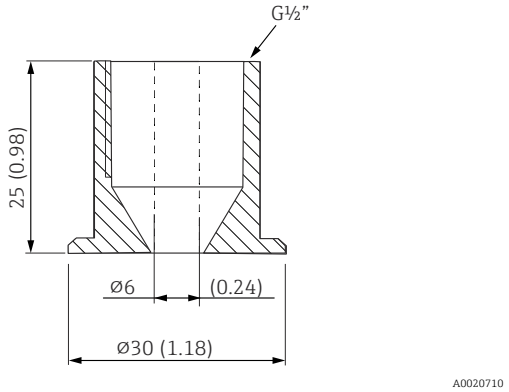


*11 Dimensions in mm (in)*

### Compression fitting

- Movable clamping ring, various process connections
- Material of compression fitting and parts in contact with the process: 316L
- Order number: TA50-..... (depending on the process connection)

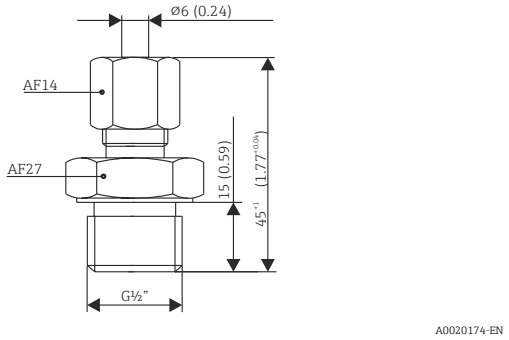


*12 Dimensions in mm (in)*

| Version | F in mm (in) | | L ~ in mm (in) | C in mm (in) | B in mm (in) | Clamping ring material | Max. process temperature | Max. process pressure |
|---|---|---|---|---|---|---|---|---|
| TA50 | G½" | SW/AF 27 | 47 (1.85) | - | 15 (0.6) | SS316 [1] | 800 °C (1472 °F) | 40 bar at 20 °C (580 psi at 68 °F) |
| | | | | | | PTFE [2] | 200 °C (392 °F) | 5 bar at 20 °C (72.5 psi at 68 °F) |
| | G¾" | SW/AF 32 | 63 (2.48) | - | 20 (0.8) | SS316 [1] | 800 °C (1472 °F) | 40 bar at 20 °C (580 psi at 68 °F) |
| | | | | | | PTFE [2] | 200 °C (392 °F) | 5 bar at 20 °C (72.5 psi at 68 °F) |
| | G1" | SW/AF 41 | 65 (2.56) | - | 25 (0.98) | SS316 [1] | 800 °C (1472 °F) | 40 bar at 20 °C (580 psi at 68 °F) |
| | | | | | | PTFE [2] | 200 °C (392 °F) | 5 bar at 20 °C (72.5 psi at 68 °F) |
| | NPT½" | SW/AF 22 | 50 (1.97) | - | 20 (0.8) | SS316 [1] | 800 °C (1472 °F) | 40 bar at 20 °C (580 psi at 68 °F) |
| | R½" | SW/AF 22 | 52 (2.05) | - | 20 (0.8) | PTFE [2] | 200 °C (392 °F) | 5 bar at 20 °C (72.5 psi at 68 °F) |
| | R¾" | SW/AF 27 | 52 (2.05) | - | 20 (0.8) | PTFE [2] | 200 °C (392 °F) | 5 bar at 20 °C (72.5 psi at 68 °F) |

1) SS316 clamping ring: can only be used once. Once released the compression fitting cannot be repositioned on the thermowell. Fully adjustable immersion length on initial installation
2) PTFE/Elastosil® clamping ring: reusable; once loosened, the compression fitting can be moved up or down on the thermowell. Fully adjustable immersion length

## Communication-specific accessories

### Coupling; connecting cable

- Coupling M12x1; straight
- Connection to M12x1 housing connector
- Materials: body PA, coupling nut CuZn, nickel-plated
- Degree of protection (connected): IP 67
- Order number: 52006263

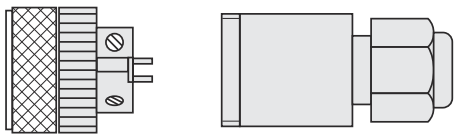


- M12x1 coupling; elbowed, for termination of connecting cable by user
- Connection to M12x1 housing connector
- Materials: body PBT/PA,
- Cap-nut GD-Zn, nickel-plated
- Degree of protection (connected): IP 67
- Order number: 51006327

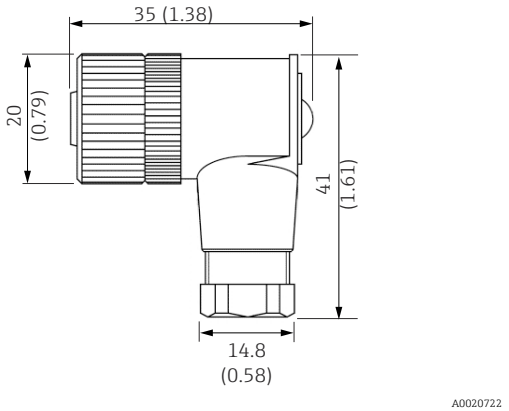


*13 Dimensions in mm (in)*

- PVC cable (terminated), 4 x 0.34 mm$^2$ with M12x1 coupling, elbowed, screw plug, length 5 m (16.4 ft)
- Degree of protection: IP67
- Order number: 51005148

Core colors:
- 1 = BN brown
- 2 = WH white
- 3 = BU blue
- 4 = BK black

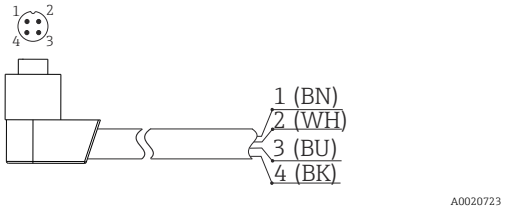


- PVC cable, 4x 0.34 mm$^2$with M12x1 coupling, with LED, elbowed,
- 316L screw plug, length5 m (16.4 ft), specially for hygiene applications,
- Degree of protection (connected): IP69K
- Order number: 52018763

Display:
- gn: device is operational
- ye1: switch status 1
- ye2: switch status 2

Not suitable for 4 to 20 mA analog output!

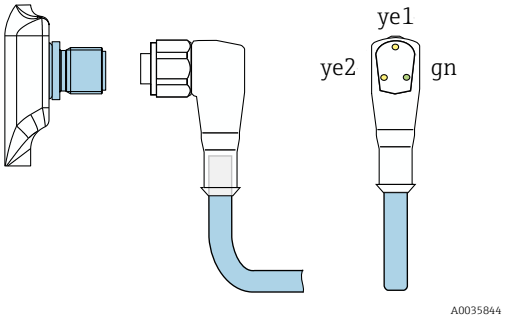


### Configuration kit

- Configuration kit for PC-programmable transmitters;
  Configuration software and interface cable for PC with USB port and 4-pin post connector
  Order code: **TXU10-AA**
- "Commubox FXA291" configuration kit with interface cable for PC with USB port. Intrinsically safe CDI interface (Endress+Hauser Common Data Interface) for transmitters with 4-pin post connector. Suitable configuration software is FieldCare for example.
  Order code: **FXA291**

### Configuration software

The ReadWin 2000 and FieldCare 'Device Setup' configuration programs can be downloaded free of charge directly from the Internet at the following addresses:

- www.produkte.endress.com/readwin
- www.produkte.endress.com/fieldcare

FieldCare 'Device Setup' can also be ordered from an Endress+Hauser sales office.

**System components**

- Easy Analog RNB130 power supply from Endress+Hauser with nominal output current IN = 1.5 A. For details, see Technical Information TI120R/09/en.
- Process indicator RIA452 from Endress+Hauser with transmitter power supply, max. output current I = 250 mA.
  For details, see Technical Information TI113R/09/en.

## Supplementary documentation

**Technical Information**

- Easy Analog RNB130: TI120R
- Process indicator RIA452: TI113R
- Universal Data Manager Ecograph T: TI01079R

**Operating Instructions**

- Thermophant T temperature switch TTR31, TTR35: BA00229R
- FieldCare configuration software: BA027S

71508879

www.addresses.endress.com

Endress+Hauser

People for Process Automation