TI01060D/06/EN/09.21
71505583
2021-01-01

Technical Information
Proline Promass F 200

Coriolis flowmeter

Robust flowmeter with genuine loop-powered technology

Application

- Measuring principle operates independently of physical fluid properties such as viscosity or density
- Highest measurement performance for liquids and gases in a wide range of applications

Device properties

- Mass flow: measured error ±0.1 %
- Medium temperature: 205 °C (401 °F)
- Nominal diameter: DN 8 to 80 (⅜ to 3")
- Loop-powered technology
- Robust: dual-compartment housing
- Plant safety: worldwide approvals (SIL, Haz. area)

Your benefits

- Highest process safety – immune to fluctuating and harsh environments
- Fewer process measuring points – multivariable measurement (flow, density, temperature)
- Space-saving installation – no in/outlet run needs
- Convenient device wiring – separate connection compartment
- Safe operation – no need to open the device due to display with touch control, background lighting
- Integrated verification – Heartbeat Technology

Endress+Hauser
People for Process Automation

Table of contents

Document information 4
Symbols used 4

Function and system design 5
Measuring principle 5
Measuring system 6
Safety 6

Input 8
Measured variable 8
Measuring range 8
Operable flow range 9
Input signal 9

Output 9
Output signal 9
Signal on alarm 11
Load 12
Ex connection data 12
Low flow cut off 16
Galvanic isolation 16
Protocol-specific data 16

Power supply 21
Terminal assignment 21
Pin assignment, device plug 22
Supply voltage 22
Power consumption 23
Current consumption 23
Power supply failure 23
Electrical connection 24
Potential equalization 27
Terminals 27
Cable entries 27
Cable specification 27
Overvoltage protection 27

Performance characteristics 28
Reference operating conditions 28
Maximum measured error 28
Repeatability 29
Response time 30
Influence of ambient temperature 30
Influence of medium temperature 30
Influence of medium pressure 31
Design fundamentals 31

Installation 32
Mounting location 32
Orientation 33
Inlet and outlet runs 34
Special mounting instructions 34

Environment 34
Ambient temperature range 34
Storage temperature 34
Climate class 35
Degree of protection 35
Vibration resistance 35
Shock resistance 35
Impact resistance 35
Interior cleaning 35
Electromagnetic compatibility (EMC) 35

Process 35
Medium temperature range 35
Density 35
Pressure-temperature ratings 35
Sensor housing 40
Rupture disk 41
Flow limit 41
Pressure loss 42
System pressure 42
Thermal insulation 42
Heating 42
Vibrations 43

Mechanical construction 44
Dimensions in SI units 44
Dimensions in US units 59
Weight 67
Materials 68
Process connections 70
Surface roughness 70

Operability 70
Operating concept 70
Languages 70
Local operation 71
Remote operation 72
Service interface 74

Certificates and approvals 74
CE mark 74
C-Tick symbol 74
Functional safety 74
Ex approval 74
Sanitary compatibility 75
Functional safety 75
HART certification 76
FOUNDATION Fieldbus certification 76
Certification PROFIBUS 76
Pressure Equipment Directive 76
Other standards and guidelines 76

Ordering information 77

Application packages 77
Diagnostics functions 77
Heartbeat Technology 78

Accessories 78
Device-specific accessories 78
Communication-specific accessories 79

Service-specific accessories 80
System components 80

Documentation 81
Standard documentation 81
Supplementary device-dependent documentation 81

Registered trademarks 82

Document information

Symbols used

Electrical symbols

Symbol	Meaning
⎓	Direct current
∼	Alternating current
≂	Direct current and alternating current
⏚	**Ground connection** A grounded terminal which, as far as the operator is concerned, is grounded via a grounding system.
⏚	**Protective ground connection** A terminal which must be connected to ground prior to establishing any other connections.
⏚	**Equipotential connection** A connection that has to be connected to the plant grounding system: This may be a potential equalization line or a star grounding system depending on national or company codes of practice.

Symbols for certain types of information

Symbol	Meaning
✓	**Permitted** Procedures, processes or actions that are permitted.
✓✓	**Preferred** Procedures, processes or actions that are preferred.
✗	**Forbidden** Procedures, processes or actions that are forbidden.
ℹ	**Tip** Indicates additional information.
	Reference to documentation
	Reference to page
	Reference to graphic
	Visual inspection

Symbols in graphics

Symbol	Meaning
1, 2, 3,...	Item numbers
1., 2., 3....	Series of steps
A, B, C, ...	Views
A-A, B-B, C-C, ...	Sections
EX	Hazardous area
~~EX~~	Safe area (non-hazardous area)
≋➡	Flow direction

Function and system design

Measuring principle

The measuring principle is based on the controlled generation of Coriolis forces. These forces are always present in a system when both translational and rotational movements are superimposed.

$F_c = 2 \cdot \Delta m\ (v \cdot \omega)$

F_c = Coriolis force

Δm = moving mass

ω = rotational velocity

v = radial velocity in rotating or oscillating system

The amplitude of the Coriolis force depends on the moving mass Δm, its velocity v in the system and thus on the mass flow. Instead of a constant rotational velocity ω, the sensor uses oscillation.

In the sensor, two parallel measuring tubes containing flowing fluid oscillate in antiphase, acting like a tuning fork. The Coriolis forces produced at the measuring tubes cause a phase shift in the tube oscillations (see illustration):

- At zero flow (when the fluid is at a standstill) the two tubes oscillate in phase (1).
- Mass flow causes deceleration of the oscillation at the inlet of the tubes (2) and acceleration at the outlet (3).

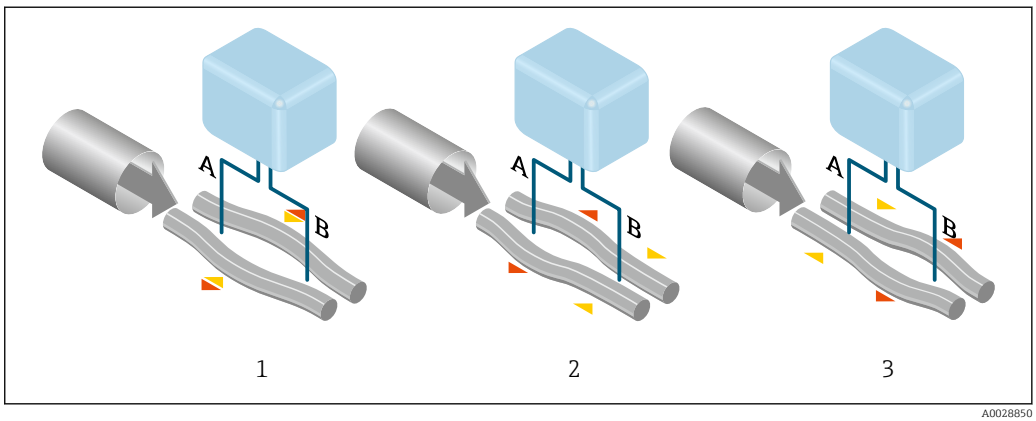

A0028850

The phase difference (A-B) increases with increasing mass flow. Electrodynamic sensors register the tube oscillations at the inlet and outlet. System balance is ensured by the antiphase oscillation of the two measuring tubes. The measuring principle operates independently of temperature, pressure, viscosity, conductivity and flow profile.

Density measurement
The measuring tube is continuously excited at its resonance frequency. A change in the mass and thus the density of the oscillating system (comprising measuring tube and fluid) results in a corresponding, automatic adjustment in the oscillation frequency. Resonance frequency is thus a function of medium density. The microprocessor utilizes this relationship to obtain a density signal.

Volume measurement
Together with the measured mass flow, this is used to calculate the volume flow.

Temperature measurement
The temperature of the measuring tube is determined in order to calculate the compensation factor due to temperature effects. This signal corresponds to the process temperature and is also available as an output signal.

Measuring system

The device consists of a transmitter and a sensor.

The device is available as a compact version:
The transmitter and sensor form a mechanical unit.

Transmitter

Promass 200 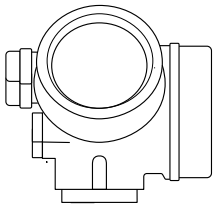 A0013471	Device versions and materials: ▪ Compact, aluminum coated: Aluminum, AlSi10Mg, coated ▪ Compact, hygienic, stainless: Hygienic version, for maximum corrosion resistance: stainless steel CF-3M (316L, 1.4404) Configuration: ▪ External operation via four-line, illuminated local display with touch control and guided menus ("Make-it-run" wizards) for applications ▪ Via operating tools (e.g. FieldCare)

Sensor

Promass F
 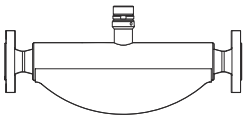
A0016507
	▪ Excellent performance across a wide range of applications
	▪ Simultaneous measurement of flow, volume flow, density and temperature (multivariable)
	▪ Immune to process influences
	▪ Nominal diameter range: DN 8 to 80 (⅜ to 3")
	▪ Materials:
	  ▪ Sensor: stainless steel, 1.4301/1.4307 (304L); optional 1.4404 (316/316L)
	  ▪ Measuring tubes: stainless steel, 1.4539 (904L); 1.4404 (316/316L); Alloy C22, 2.4602 (UNS N06022)
	  ▪ Process connections: stainless steel, 1.4404 (316/316L); 1.4301 (304); Alloy C22, 2.4602 (UNS N06022)

Safety

IT security

We only provide a warranty if the device is installed and used as described in the Operating Instructions. The device is equipped with security mechanisms to protect it against any inadvertent changes to the device settings.

IT security measures in line with operators' security standards and designed to provide additional protection for the device and device data transfer must be implemented by the operators themselves.

Device-specific IT security

The device offers a range of specific functions to support protective measures on the operator's side. These functions can be configured by the user and guarantee greater in-operation safety if used correctly. An overview of the most important functions is provided in the following section.

Protecting access via hardware write protection

Write access to the device parameters via the local display or operating tool (e.g. FieldCare, DeviceCare) can be disabled via a write protection switch (DIP switch on the motherboard). When hardware write protection is enabled, only read access to the parameters is possible.

Hardware write protection is disabled when the device is delivered.

Protecting access via a password

A password can be used to protect against write access to the device parameters.

This password locks write access to the device parameters via the local display or another operating tool (e.g. FieldCare, DeviceCare) and, in terms of functionality, is equivalent to hardware write protection. If the service interface CDI RJ-45 is used, read access is only possible if the password is entered.

User-specific access code

Write access to the device parameters via the local display or operating tool (e.g. FieldCare, DeviceCare) can be protected by the modifiable, user-specific access code.

Access via fieldbus

Cyclic fieldbus communication (read and write, e.g. measured value transmission) with a higher-order system is not affected by the restrictions mentioned above.

Input

Measured variable

Direct measured variables

- Mass flow
- Density
- Temperature

Calculated measured variables

- Volume flow
- Corrected volume flow
- Reference density

Measuring range

Measuring ranges for liquids

DN		Measuring range full scale values $\dot{m}_{min(F)}$ to $\dot{m}_{max(F)}$	
[mm]	[in]	[kg/h]	[lb/min]
8	⅜	0 to 2 000	0 to 73.50
15	½	0 to 6 500	0 to 238.9
25	1	0 to 18 000	0 to 661.5
40	1½	0 to 45 000	0 to 1 654
50	2	0 to 70 000	0 to 2 573
80	3	0 to 180 000	0 to 6 615

Measuring ranges for gases

The full scale values depend on the density of the gas and can be calculated with the formula below:
$\dot{m}_{max(G)} = \dot{m}_{max(F)} \cdot \rho_G : x$

$\dot{m}_{max(G)}$	Maximum full scale value for gas [kg/h]
$\dot{m}_{max(F)}$	Maximum full scale value for liquid [kg/h]
$\dot{m}_{max(G)} < \dot{m}_{max(F)}$	$\dot{m}_{max(G)}$ can never be greater than $\dot{m}_{max(F)}$
ρ_G	Gas density in [kg/m³] at operating conditions
x	Constant dependent on nominal diameter

DN		x
[mm]	[in]	[kg/m³]
8	⅜	60
15	½	80
25	1	90
40	1½	90
50	2	90
80	3	110

To calculate the measuring range, use the *Applicator* sizing tool → 🗎 80

Calculation example for gas
- Sensor: Promass F, DN 50
- Gas: Air with a density of 60.3 kg/m³ (at 20 °C and 50 bar)
- Measuring range (liquid): 70 000 kg/h
- x = 90 kg/m³ (for Promass F, DN 50)

Maximum possible full scale value:
$\dot{m}_{max(G)} = \dot{m}_{max(F)} \cdot \rho_G : x = 70\,000\ kg/h \cdot 60.3\ kg/m^3 : 90\ kg/m^3 = 46\,900\ kg/h$

Recommended measuring range

"Flow limit" section → 📄 41

Operable flow range

Over 1000 : 1.

Flow rates above the preset full scale value do not override the electronics unit, with the result that the totalizer values are registered correctly.

Input signal

External measured values

To increase the accuracy of certain measured variables or to calculate the corrected volume flow for gases, the automation system can continuously write the operating pressure to the measuring device. Endress+Hauser recommends the use of a pressure measuring device for absolute pressure, e.g. Cerabar M or Cerabar S.

Various pressure transmitters and temperature measuring devices can be ordered from Endress+Hauser: see "Accessories" section → 📄 80

It is recommended to read in external measured values to calculate the following measured variables:
- Mass flow
- Corrected volume flow

HART protocol

The measured values are written from the automation system to the measuring device via the HART protocol. The pressure transmitter must support the following protocol-specific functions:
- HART protocol
- Burst mode

Digital communication

The measured values can be written from the automation system to the measuring via:
- FOUNDATION Fieldbus
- PROFIBUS PA

Output

Output signal

Current output

Current output 1	4-20 mA HART (passive)
Current output 2	4-20 mA (passive)
Resolution	< 1 µA
Damping	Adjustable: 0.0 to 999.9 s
Assignable measured variables	▪ Mass flow ▪ Volume flow ▪ Corrected volume flow ▪ Density ▪ Reference density ▪ Temperature

Pulse/frequency/switch output

Function	Can be set to pulse, frequency or switch output
Version	Passive, open collector

Maximum input values	▪ DC 35 V ▪ 50 mA For information on the Ex connection values → 12
Voltage drop	▪ For ≤ 2 mA: 2 V ▪ For 10 mA: 8 V
Residual current	≤ 0.05 mA
Pulse output	
Pulse width	Adjustable: 5 to 2 000 ms
Maximum pulse rate	100 Impulse/s
Pulse value	Adjustable
Assignable measured variables	▪ Mass flow ▪ Volume flow ▪ Corrected volume flow
Frequency output	
Output frequency	Adjustable: 0 to 1 000 Hz
Damping	Adjustable: 0 to 999 s
Pulse/pause ratio	1:1
Assignable measured variables	▪ Mass flow ▪ Volume flow ▪ Corrected volume flow ▪ Density ▪ Reference density ▪ Temperature
Switch output	
Switching behavior	Binary, conductive or non-conductive
Switching delay	Adjustable: 0 to 100 s
Number of switching cycles	Unlimited

Assignable functions	▪ Off
	▪ On
	▪ Diagnostic behavior
	▪ Limit value
	  ▪ Mass flow
	  ▪ Volume flow
	  ▪ Corrected volume flow
	  ▪ Density
	  ▪ Reference density
	  ▪ Temperature
	  ▪ Totalizer 1-3
	▪ Flow direction monitoring
	▪ Status
	  ▪ Partially filled pipe detection
	  ▪ Low flow cut off

FOUNDATION Fieldbus

Signal encoding	Manchester Bus Powered (MBP)
Data transfer	31.25 KBit/s, Voltage mode

PROFIBUS PA

Signal encoding	Manchester Bus Powered (MBP)
Data transfer	31.25 KBit/s, Voltage mode

Signal on alarm

Depending on the interface, failure information is displayed as follows:

Current output 4 to 20 mA

4 to 20 mA

Failure mode	Choose from: ▪ 4 to 20 mA in accordance with NAMUR recommendation NE 43 ▪ 4 to 20 mA in accordance with US ▪ Min. value: 3.59 mA ▪ Max. value: 22.5 mA ▪ Freely definable value between: 3.59 to 22.5 mA ▪ Actual value ▪ Last valid value

Pulse/frequency/switch output

Pulse output	
Failure mode	Choose from: ▪ Actual value ▪ No pulses
Frequency output	
Failure mode	Choose from: ▪ Actual value ▪ 0 Hz ▪ Defined value: 0 to 1250 Hz
Switch output	
Failure mode	Choose from: ▪ Current status ▪ Open ▪ Closed

FOUNDATION Fieldbus

Status and alarm messages	Diagnostics in accordance with FF-891
Error current FDE (Fault Disconnection Electronic)	0 mA

PROFIBUS PA

Status and alarm messages	Diagnostics in accordance with PROFIBUS PA Profile 3.02
Error current FDE (Fault Disconnection Electronic)	0 mA

Local display

Plain text display	With information on cause and remedial measures
Backlight	Additionally for device version with SD03 local display: red lighting indicates a device error.

Status signal as per NAMUR recommendation NE 107

Interface/protocol

- Via digital communication:
  - HART protocol
  - FOUNDATION Fieldbus
  - PROFIBUS PA
- Via service interface

Plain text display	With information on cause and remedial measures

Additional information on remote operation → 72

Load

Load for current output: 0 to 500 Ω, depending on the external supply voltage of the power supply unit

Calculation of the maximum load

Depending on the supply voltage of the power supply unit (U_S), the maximum load (R_B) including line resistance must be observed to ensure adequate terminal voltage at the device. In doing so, observe the minimum terminal voltage

- For U_S = 17.9 to 18.9 V: $R_B \leq (U_S - 17.9\ V)$: 0.0036 A
- For U_S = 18.9 to 24 V: $R_B \leq (U_S - 13\ V)$: 0.022 A
- For U_S = ≥ 24 V: $R_B \leq 500\ \Omega$

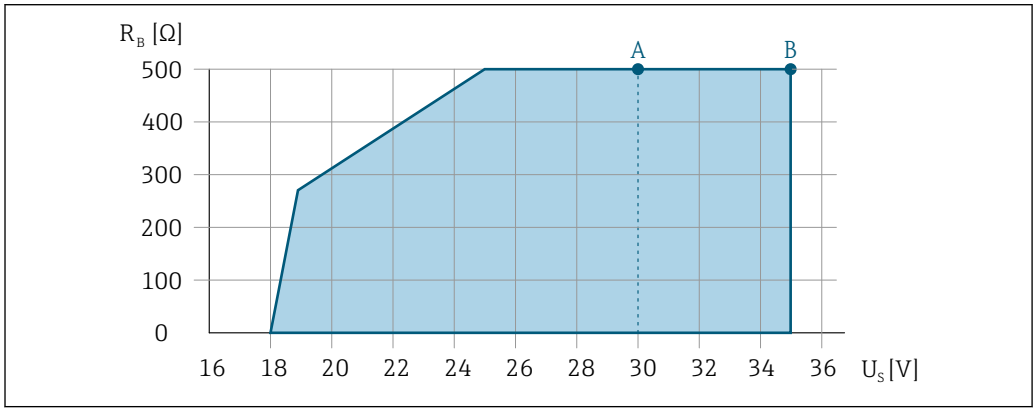

A *Operating range for order code for "Output", option A "4-20 mA HART"/option B "4-20 mA HART, pulse/frequency/switch output" with Ex i and option C "4-20 mA HART + 4-20 mA analog"*

B *Operating range for order code for "Output", option A "4-20 mA HART"/option B "4-20 mA HART, pulse/frequency/switch output" with non-Ex and Ex d*

Sample calculation

Supply voltage of the power supply unit: U_S = 19 V
Maximum load: $R_B \leq (19\ V - 13\ V)$: 0.022 A = 273 Ω

Ex connection data

Safety-related values

Type of protection Ex d

Order code for "Output"	Output type	Safety-related values
Option **A**	4-20mA HART	U_{nom} = DC 35 V U_{max} = 250 V
Option **B**	4-20mA HART	U_{nom} = DC 35 V U_{max} = 250 V
	Pulse/frequency/switch output	U_{nom} = DC 35 V U_{max} = 250 V P_{max} = 1 W [1)]

Order code for "Output"	Output type	Safety-related values
Option **C**	4-20mA HART	U_{nom} = DC 30 V U_{max} = 250 V
	4-20mA analog	
Option **E**	FOUNDATION Fieldbus	U_{nom} = DC 32 V U_{max} = 250 V P_{max} = 0.88 W
	Pulse/frequency/switch output	U_{nom} = DC 35 V U_{max} = 250 V P_{max} = 1 W [1)]
Option **G**	PROFIBUS PA	U_{nom} = DC 32 V U_{max} = 250 V P_{max} = 0.88 W
	Pulse/frequency/switch output	U_{nom} = DC 35 V U_{max} = 250 V P_{max} = 1 W [1)]

1) Internal circuit limited by R_i = 760.5 Ω

Ex nA type of protection

Order code for "Output"	Output type	Safety-related values
Option **A**	4-20mA HART	U_{nom} = DC 35 V U_{max} = 250 V
Option **B**	4-20mA HART	U_{nom} = DC 35 V U_{max} = 250 V
	Pulse/frequency/switch output	U_{nom} = DC 35 V U_{max} = 250 V P_{max} = 1 W [1)]
Option **C**	4-20mA HART	U_{nom} = DC 30 V U_{max} = 250 V
	4-20mA analog	
Option **E**	FOUNDATION Fieldbus	U_{nom} = DC 32 V U_{max} = 250 V P_{max} = 0.88 W
	Pulse/frequency/switch output	U_{nom} = DC 35 V U_{max} = 250 V P_{max} = 1 W [1)]
Option **G**	PROFIBUS PA	U_{nom} = DC 32 V U_{max} = 250 V P_{max} = 0.88 W
	Pulse/frequency/switch output	U_{nom} = DC 35 V U_{max} = 250 V P_{max} = 1 W [1)]

1) Internal circuit limited by R_i = 760.5 Ω

Type of protection XP

Order code for "Output"	Output type	Safety-related values
Option **A**	4-20mA HART	U_{nom} = DC 35 V U_{max} = 250 V
Option **B**	4-20mA HART	U_{nom} = DC 35 V U_{max} = 250 V
	Pulse/frequency/switch output	U_{nom} = DC 35 V U_{max} = 250 V P_{max} = 1 W [1)]

Order code for "Output"	Output type	Safety-related values
Option **C**	4-20mA HART	U_{nom} = DC 30 V U_{max} = 250 V
	4-20mA analog	
Option **E**	FOUNDATION Fieldbus	U_{nom} = DC 32 V U_{max} = 250 V P_{max} = 0.88 W
	Pulse/frequency/switch output	U_{nom} = DC 35 V U_{max} = 250 V P_{max} = 1 W [1)]
Option **G**	PROFIBUS PA	U_{nom} = DC 32 V U_{max} = 250 V P_{max} = 0.88 W
	Pulse/frequency/switch output	U_{nom} = DC 35 V U_{max} = 250 V P_{max} = 1 W [1)]

1) Internal circuit limited by R_i = 760.5 Ω

Intrinsically safe values

Type of protection Ex ia

Order code for "Output"	Output type	Intrinsically safe values	
Option **A**	4-20mA HART	U_i = DC 30 V I_i = 300 mA P_i = 1 W L_i = 0 µH C_i = 5 nF	
Option **B**	4-20mA HART	U_i = DC 30 V I_i = 300 mA P_i = 1 W L_i = 0 µH C_i = 5 nF	
	Pulse/frequency/switch output	U_i = DC 30 V I_i = 300 mA P_i = 1 W L_i = 0 µH C_i = 6 nF	
Option **C**	4-20mA HART	U_i = DC 30 V I_i = 300 mA P_i = 1 W L_i = 0 µH C_i = 30 nF	
	4-20mA analog		
Option **E**	FOUNDATION Fieldbus	STANDARD U_i = 30 V I_i = 300 mA P_i = 1.2 W L_i = 10 µH C_i = 5 nF	FISCO U_i = 17.5 V I_i = 550 mA P_i = 5.5 W L_i = 10 µH C_i = 5 nF
	Pulse/frequency/switch output	U_i = 30 V I_i = 300 mA P_i = 1 W L_i = 0 µH C_i = 6 nF	

Order code for "Output"	Output type	Intrinsically safe values	
Option **G**	PROFIBUS PA	STANDARD U_i = 30 V I_i = 300 mA P_i = 1.2 W L_i = 10 µH C_i = 5 nF	FISCO U_i = 17.5 V I_i = 550 mA P_i = 5.5 W L_i = 10 µH C_i = 5 nF
	Pulse/frequency/switch output	U_i = 30 V I_i = 300 mA P_i = 1 W L_i = 0 µH C_i = 6 nF	

Type of protection Ex ic

Order code for "Output"	Output type	Intrinsically safe values	
Option **A**	4-20mA HART	U_i = DC 35 V I_i = n.a. P_i = 1 W L_i = 0 µH C_i = 5 nF	
Option **B**	4-20mA HART	U_i = DC 35 V I_i = n.a. P_i = 1 W L_i = 0 µH C_i = 5 nF	
	Pulse/frequency/switch output	U_i = DC 35 V I_i = n.a. P_i = 1 W L_i = 0 µH C_i = 6 nF	
Option **C**	4-20mA HART 4-20mA analog	U_i = DC 30 V I_i = n.a. P_i = 1 W L_i = 0 µH C_i = 30 nF	
Option **E**	FOUNDATION Fieldbus	STANDARD U_i = 32 V I_i = 300 mA P_i = n.a. L_i = 10 µH C_i = 5 nF	FISCO U_i = 17.5 V I_i = n.a. P_i = n.a. L_i = 10 µH C_i = 5 nF
	Pulse/frequency/switch output	U_i = 35 V I_i = 300 mA P_i = 1 W L_i = 0 µH C_i = 6 nF	
Option **G**	PROFIBUS PA	STANDARD U_i = 32 V I_i = 300 mA P_i = n.a. L_i = 10 µH C_i = 5 nF	FISCO U_i = 17.5 V I_i = n.a. P_i = n.a. L_i = 10 µH C_i = 5 nF
	Pulse/frequency/switch output	U_i = 35 V I_i = 300 mA P_i = 1 W L_i = 0 µH C_i = 6 nF	

Type of protection IS

Order code for "Output"	Output type	Intrinsically safe values	
Option **A**	4-20mA HART	U_i = DC 30 V I_i = 300 mA P_i = 1 W L_i = 0 µH C_i = 5 nF	
Option **B**	4-20mA HART	U_i = DC 30 V I_i = 300 mA P_i = 1 W L_i = 0 µH C_i = 5 nF	
	Pulse/frequency/switch output	U_i = DC 30 V I_i = 300 mA P_i = 1 W L_i = 0 µH C_i = 6 nF	
Option **C**	4-20mA HART	U_i = DC 30 V I_i = 300 mA P_i = 1 W L_i = 0 µH C_i = 30 nF	
	4-20mA analog		
Option **E**	FOUNDATION Fieldbus	STANDARD U_i = 30 V I_i = 300 mA P_i = 1.2 W L_i = 10 µH C_i = 5 nF	FISCO U_i = 17.5 V I_i = 550 mA P_i = 5.5 W L_i = 10 µH C_i = 5 nF
	Pulse/frequency/switch output	U_i = 30 V I_i = 300 mA P_i = 1 W L_i = 0 µH C_i = 6 nF	
Option **G**	PROFIBUS PA	STANDARD U_i = 30 V I_i = 300 mA P_i = 1.2 W L_i = 10 µH C_i = 5 nF	FISCO U_i = 17.5 V I_i = 550 mA P_i = 5.5 W L_i = 10 µH C_i = 5 nF
	Pulse/frequency/switch output	U_i = 30 V I_i = 300 mA P_i = 1 W L_i = 0 µH C_i = 6 nF	

Low flow cut off

The switch points for low flow cut off are user-selectable.

Galvanic isolation

All outputs are galvanically isolated from one another.

Protocol-specific data

HART

Manufacturer ID	0x11
Device type ID	0x54
HART protocol revision	7
Device description files (DTM, DD)	Information and files under: www.endress.com
HART load	▪ Min. 250 Ω ▪ Max. 500 Ω

Dynamic variables	Read out the dynamic variables: HART command 3 The measured variables can be freely assigned to the dynamic variables. **Measured variables for PV (primary dynamic variable)** ▪ Mass flow ▪ Volume flow ▪ Corrected volume flow ▪ Density ▪ Reference density ▪ Temperature ▪ Carrier pipe temperature ▪ Electronic temperature ▪ Oscillation frequency ▪ Oscillation amplitude ▪ Oscillation damping ▪ Signal asymmetry **Measured variables for SV, TV, QV (secondary, tertiary and quaternary dynamic variable)** ▪ Mass flow ▪ Volume flow ▪ Corrected volume flow ▪ Density ▪ Reference density ▪ Temperature ▪ Carrier pipe temperature ▪ Electronic temperature ▪ Oscillation frequency ▪ Oscillation amplitude ▪ Oscillation damping ▪ Signal asymmetry ▪ External pressure ▪ Totalizer 1 ▪ Totalizer 2 ▪ Totalizer 3
Device variables	Read out the device variables: HART command 9 The device variables are permanently assigned.

FOUNDATION Fieldbus

Manufacturer ID	0x452B48
Ident number	0x1054
Device revision	1
DD revision	Information and files under: ▪ www.endress.com ▪ www.fieldbus.org
CFF revision	
Device Tester Version (ITK version)	6.1.1
ITK Test Campaign Number	IT094200
Link Master capability (LAS)	Yes
Choice of "Link Master" and "Basic Device"	Yes Factory setting: Basic Device
Node address	Factory setting: 247 (0xF7)
Supported functions	The following methods are supported: ▪ Restart ▪ ENP Restart ▪ Diagnostic
Virtual Communication Relationships (VCRs)	
Number of VCRs	44
Number of link objects in VFD	50
Permanent entries	1

Client VCRs	0
Server VCRs	10
Source VCRs	43
Sink VCRs	0
Subscriber VCRs	43
Publisher VCRs	43
Device Link Capabilities	
Slot time	4
Min. delay between PDU	8
Max. response delay	Min. 5

Transducer Blocks

Block	Contents	Output values
Setup Transducer Block (TRDSUP)	All parameters for standard commissioning.	No output values
Advanced Setup Transducer Block (TRDASUP)	All parameters for more accurate measurement configuration.	No output values
Display Transducer Block (TRDDISP)	Parameters for configuring the local display.	No output values
HistoROM Transducer Block (TRDHROM)	Parameters for using the HistoROM function.	No output values
Diagnostic Transducer Block (TRDDIAG)	Diagnostics information.	Process variables (AI Channel) ▪ Temperature (7) ▪ Volume flow (9) ▪ Mass flow (11) ▪ Corrected volume flow (13) ▪ Density (14) ▪ Reference density (15)
Expert Configuration Transducer Block (TRDEXP)	Parameters that require the user to have in-depth knowledge of the operation of the device in order to configure the parameters appropriately.	No output values
Expert Information Transducer Block (TRDEXPIN)	Parameters that provide information about the state of the device.	No output values
Service Sensor Transducer Block (TRDSRVS)	Parameters that can only be accessed by Endress +Hauser Service.	No output values
Service Information Transducer Block (TRDSRVIF)	Parameters that provide Endress+Hauser Service with information about the state of the device.	No output values
Total Inventory Counter Transducer Block (TRDTIC)	Parameters for configuring all the totalizers and the inventory counter.	Process variables (AI Channel) ▪ Totalizer 1 (16) ▪ Totalizer 2 (17) ▪ Totalizer 3 (18)
Heartbeat Technology Transducer Block (TRDHBT)	Parameters for the configuration and comprehensive information about the results of the verification.	No output values
Heartbeat Results 1 Transducer Block (TRDHBTR1)	Information about the results of the verification.	No output values

Block	Contents	Output values
Heartbeat Results 2 Transducer Block (TRDHBTR2)	Information about the results of the verification.	No output values
Heartbeat Results 3 Transducer Block (TRDHBTR3)	Information about the results of the verification.	No output values
Heartbeat Results 4 Transducer Block (TRDHBTR4)	Information about the results of the verification.	No output values

Function blocks

Block	Number of blocks	Contents	Process variables (Channel)
Resource Block (RB)	1	This Block (extended functionality) contains all the data that uniquely identify the device; it is the equivalent of an electronic nameplate for the device.	–
Analog Input Block (AI)	6	This Block (extended functionality) receives the measurement data provided by the Sensor Block (can be selected via a channel number) and makes the data available for other blocks at the output. **Execution time:** 27 ms	▪ Temperature (7) ▪ Volume flow (9) ▪ Mass flow (11) ▪ Corrected volume flow (13) ▪ Density (14) ▪ Reference density (15) ▪ Totalizer 1 (16) ▪ Totalizer 2 (17) ▪ Totalizer 3 (18)
Discrete Input Block (DI)	2	This Block (standard functionality) receives a discrete value (e.g. indicator that measuring range has been exceeded) and makes the value available for other blocks at the output. **Execution time:** 19 ms	▪ Switch output state (101) ▪ Empty pipe detection (102) ▪ Low flow cut off (103) ▪ Status verification (105)
PID Block (PID)	1	This Block (standard functionality) acts as a proportional-integral-differential controller and can be used universally for control in the field. It enables cascading and feedforward control. **Execution time:** 25 ms	–
Multiple Analog Output Block (MAO)	1	This Block (standard functionality) receives several analog values and makes them available for other blocks at the output. **Execution time:** 22 ms	Channel_0 (121) ▪ Value 1: External compensation variable, pressure ▪ Value 2 to 8: Not assigned The pressure must be transmitted to the device in the SI basic unit.

Block	Number of blocks	Contents	Process variables (Channel)
Multiple Digital Output Block (MDO)	1	This Block (standard functionality) receives several discrete values and makes them available for other blocks at the output. **Execution time:** 19 ms	Channel_DO (122) ▪ Value 1: Reset totalizer 1 ▪ Value 2: Reset totalizer 2 ▪ Value 3: Reset totalizer 3 ▪ Value 4: Flow override ▪ Value 5: Start heartbeat verification ▪ Value 6: Status switch output ▪ Value 7: Start zero point adjustment ▪ Value 8: Not assigned
Integrator Block (IT)	1	This Block (standard functionality) integrates a measured variable over time or totalizes the pulses from a Pulse Input Block. The Block can be used as a totalizer that totalizes until a reset, or as a batch totalizer whereby the integrated value is compared against a target value generated before or during the control routine and generates a binary signal when the target value is reached. **Execution time:** 21 ms	–

PROFIBUS PA

Manufacturer ID	0x11
Ident number	0x155F
Profile version	3.02
Device description files (GSD, DTM, DD)	Information and files under: ▪ www.endress.com ▪ www.profibus.org
Output values (from measuring device to automation system)	**Analog input 1 to 6** ▪ Mass flow ▪ Volume flow ▪ Corrected volume flow ▪ Density ▪ Reference density ▪ Temperature **Digital input 1 to 2** ▪ Empty pipe detection ▪ Low flow cut off ▪ Status switch output ▪ Status verification **Totalizer 1 to 3** ▪ Mass flow ▪ Volume flow ▪ Corrected volume flow

Input values
(from automation system to measuring device)
	Analog output
	External pressure
	
	Digital output 1 to 4 (fixed assignment)
	▪ Digital output 1: switch positive zero return on/off
	▪ Digital output 2: switch zero point adjustment on/off
	▪ Digital output 3: switch switch output on/off
	▪ Digital output 4: start verification
	
	Totalizer 1 to 3
	▪ Totalize
	▪ Reset and hold
	▪ Preset and hold
	▪ Operating mode configuration:
	  ▪ Net flow total
	  ▪ Forward flow total
	  ▪ Reverse flow total

Supported functions	▪ Identification & Maintenance Simplest device identification on the part of the control system and nameplate ▪ PROFIBUS upload/download Reading and writing parameters is up to ten times faster with PROFIBUS upload/download ▪ Condensed status Simplest and self-explanatory diagnostic information by categorizing diagnostic messages that occur
Configuration of the device address	▪ DIP switches on the I/O electronics module ▪ Local display ▪ via operating tools (e.g. FieldCare)

Power supply

Terminal assignment

Transmitter

Connection versions

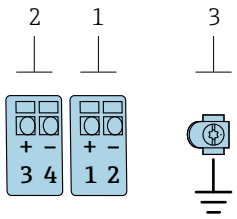

Maximum number of terminals, without integrated overvoltage protection

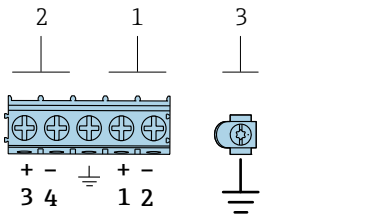

Maximum number of terminals, with integrated overvoltage protection

1	*Output 1 (passive): supply voltage and signal transmission*
2	*Output 2 (passive): supply voltage and signal transmission*
3	*Ground terminal for cable shield*

Order code for "Output"	Terminal numbers			
	Output 1		Output 2	
	1 (+)	2 (-)	3 (+)	4 (-)
Option **A**	4-20 mA HART (passive)		-	
Option **B** [1]	4-20 mA HART (passive)		Pulse/frequency/switch output (passive)	
Option **C** [1]	4-20 mA HART (passive)		4-20 mA analog (passive)	

Order code for "Output"	Terminal numbers			
	Output 1		Output 2	
	1 (+)	2 (-)	3 (+)	4 (-)
Option **E** [1) 2)]	FOUNDATION Fieldbus		Pulse/frequency/switch output (passive)	
Option **G** [1) 3)]	PROFIBUS PA		Pulse/frequency/switch output (passive)	

1) Output 1 must always be used; output 2 is optional.
2) FOUNDATION Fieldbus with integrated reverse polarity protection.
3) PROFIBUS PA with integrated reverse polarity protection.

Pin assignment, device plug

PROFIBUS PA

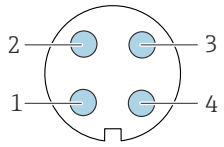

Pin	Assignment		Coding	Plug/socket
1	+	PROFIBUS PA +	A	Plug
2		Grounding		
3	-	PROFIBUS PA –		
4		Not assigned		

FOUNDATION Fieldbus

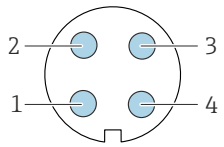

Pin	Assignment		Coding	Plug/socket
1	+	Signal +	A	Plug
2	-	Signal –		
3		Grounding		
4		Not assigned		

Supply voltage

Transmitter

An external power supply is required for each output.

Order code for "Output"	Minimum terminal voltage	Maximum terminal voltage
Option **A** [1) 2)]: 4-20 mA HART	▪ For 4 mA: ≥ DC 17.9 V ▪ For 20 mA: ≥ DC 13.5 V	DC 35 V
Option **B** [1) 2)]: 4-20 mA HART, pulse/frequency/ switch output	▪ For 4 mA: ≥ DC 17.9 V ▪ For 20 mA: ≥ DC 13.5 V	DC 35 V
Option **C** [1) 2)]: 4-20 mA HART + 4-20 mA analog	▪ For 4 mA: ≥ DC 17.9 V ▪ For 20 mA: ≥ DC 13.5 V	DC 30 V

Order code for "Output"	Minimum terminal voltage	Maximum terminal voltage
Option **E** [3]: FOUNDATION Fieldbus, pulse/frequency/switch output	≥ DC 9 V	DC 32 V
Option **G** [3]: PROFIBUS PA, pulse/frequency/switch output	≥ DC 9 V	DC 32 V

1) External supply voltage of the power supply unit with load.
2) For device versions with SD03 local display: The terminal voltage must be increased by DC 2 V if backlighting is used.
3) For device version with SD03 local display: The terminal voltage must be increased by DC 0.5 V if backlighting is used.

For information about the load see → 🗎 12

Various power supply units can be ordered from Endress+Hauser: → 🗎 80

For information on the Ex connection values → 🗎 12

Power consumption

Transmitter

Order code for "Output"	Maximum power consumption
Option **A**: 4-20 mA HART	770 mW
Option **B**: 4-20 mA HART, pulse/frequency/switch output	▪ Operation with output 1: 770 mW ▪ Operation with output 1 and 2: 2 770 mW
Option **C**: 4-20 mA HART + 4-20 mA analog	▪ Operation with output 1: 660 mW ▪ Operation with output 1 and 2: 1 320 mW
Option **E**: FOUNDATION Fieldbus, pulse/frequency/switch output	▪ Operation with output 1: 576 mW ▪ Operation with output 1 and 2: 2 576 mW
Option **G**: PROFIBUS PA, pulse/frequency/switch output	▪ Operation with output 1: 512 mW ▪ Operation with output 1 and 2: 2 512 mW

For information on the Ex connection values → 🗎 12

Current consumption

Current output

For every 4-20 mA or 4-20 mA HART current output: 3.6 to 22.5 mA

If the option **Defined value** is selected in the **Failure mode** parameter : 3.59 to 22.5 mA

PROFIBUS PA

16 mA

FOUNDATION Fieldbus

18 mA

Power supply failure

- Totalizers stop at the last value measured.
- Configuration is retained in the device memory (HistoROM).
- Error messages (incl. total operated hours) are stored.

Electrical connection

Connecting the transmitter

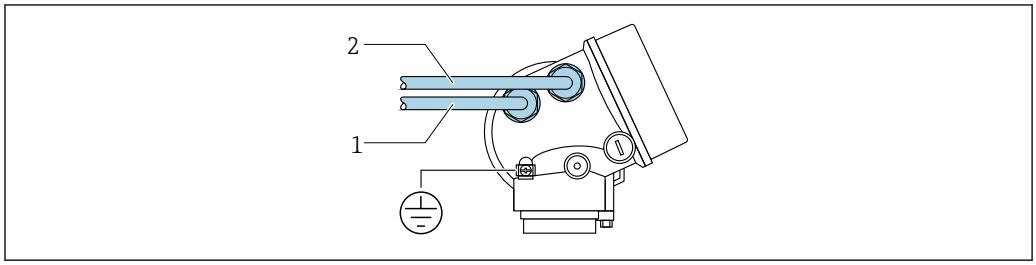

A0015510

1 Cable entry for output 1
2 Cable entry for output 2

Connection examples

Current output 4-20 mA HART

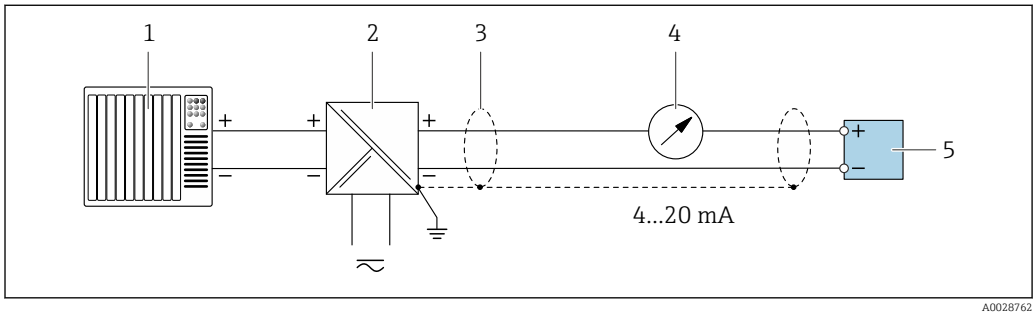

A0028762

1 Connection example for 4 to 20 mA HART current output (passive)

1 Automation system with current input (e.g. PLC)
2 Power supply
3 Cable shield: the cable shield must be grounded at both ends to comply with EMC requirements; observe cable specifications → 27
4 Analog display unit: observe maximum load → 12
5 Transmitter

Pulse/frequency output

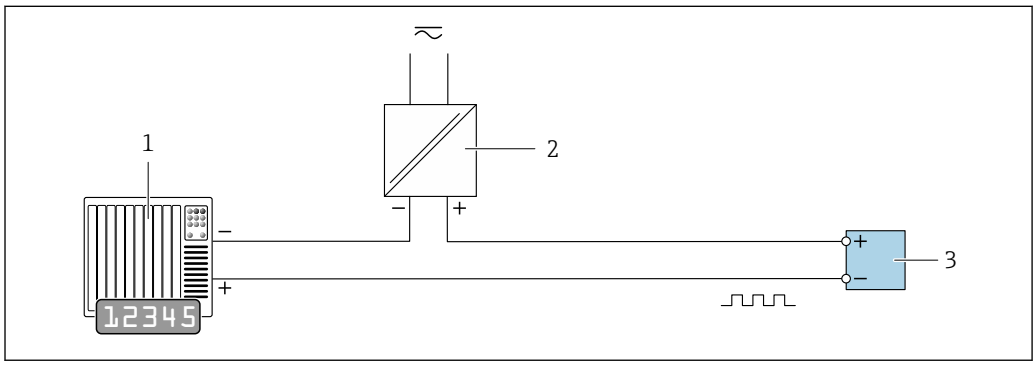

A0028761

2 Connection example for pulse/frequency output (passive)

1 Automation system with pulse/frequency input (e.g. PLC)
2 Power supply
3 Transmitter: Observe input values → 9

Switch output

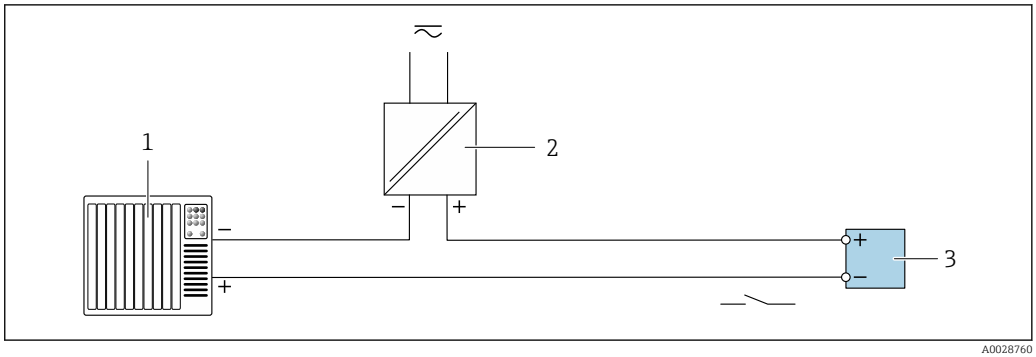

3 Connection example for switch output (passive)

1 *Automation system with switch input (e.g. PLC)*
2 *Power supply*
3 *Transmitter: Observe input values → 9*

PROFIBUS-PA

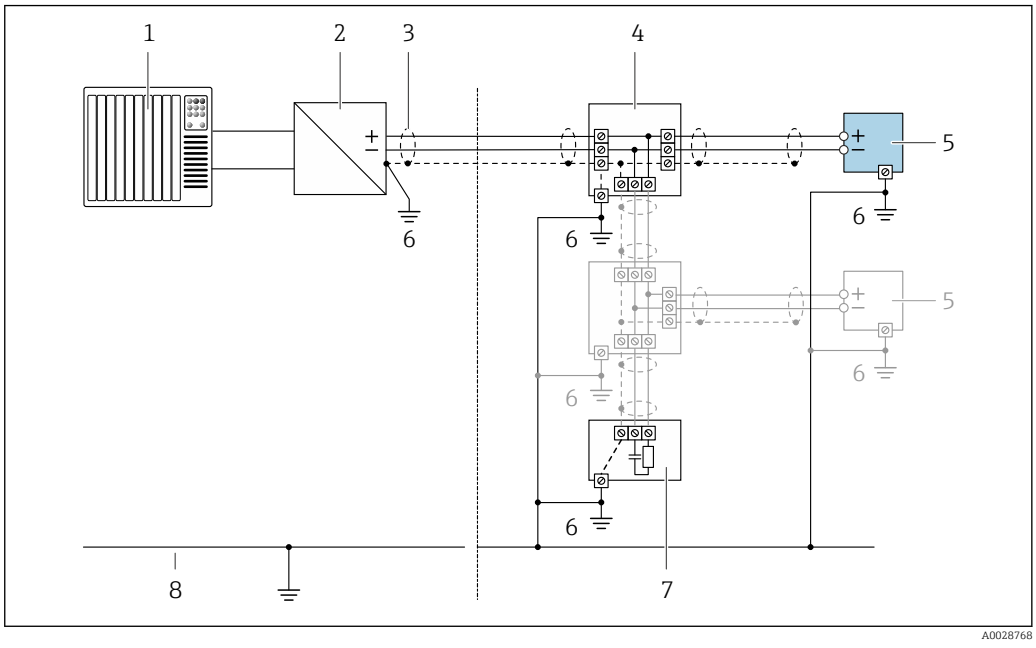

4 Connection example for PROFIBUS-PA

1 *Control system (e.g. PLC)*
2 *PROFIBUS PA segment coupler*
3 *Cable shield: the cable shield must be grounded at both ends to comply with EMC requirements; observe cable specifications*
4 *T-box*
5 *Measuring device*
6 *Local grounding*
7 *Bus terminator*
8 *Potential matching line*

FOUNDATION Fieldbus

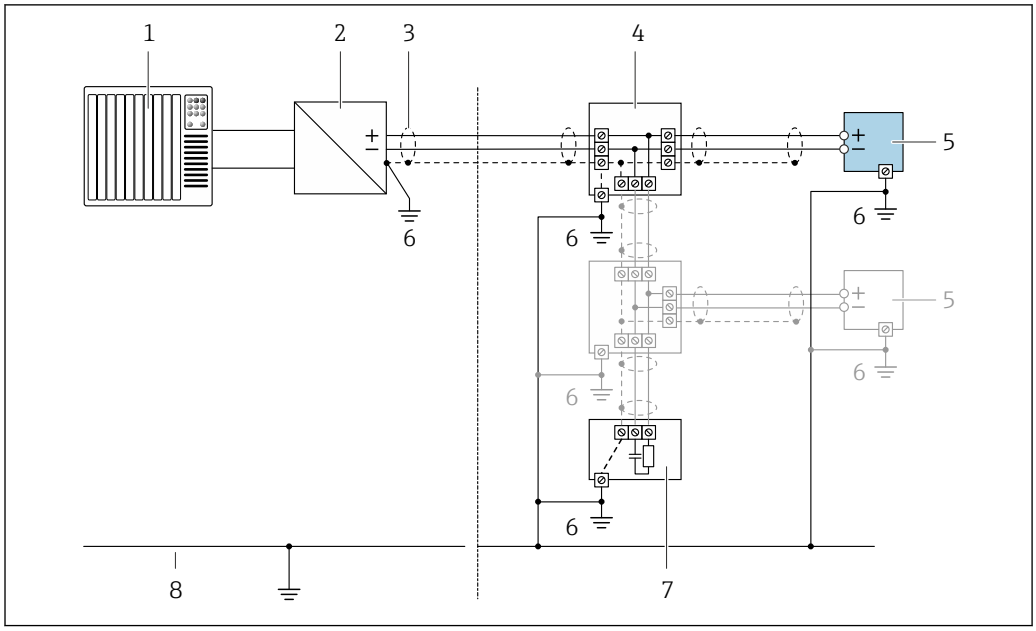

5 Connection example for FOUNDATION Fieldbus

1 *Control system (e.g. PLC)*
2 *Power Conditioner (FOUNDATION Fieldbus)*
3 *Cable shield: the cable shield must be grounded at both ends to comply with EMC requirements; observe cable specifications*
4 *T-box*
5 *Measuring device*
6 *Local grounding*
7 *Bus terminator*
8 *Potential matching line*

HART input

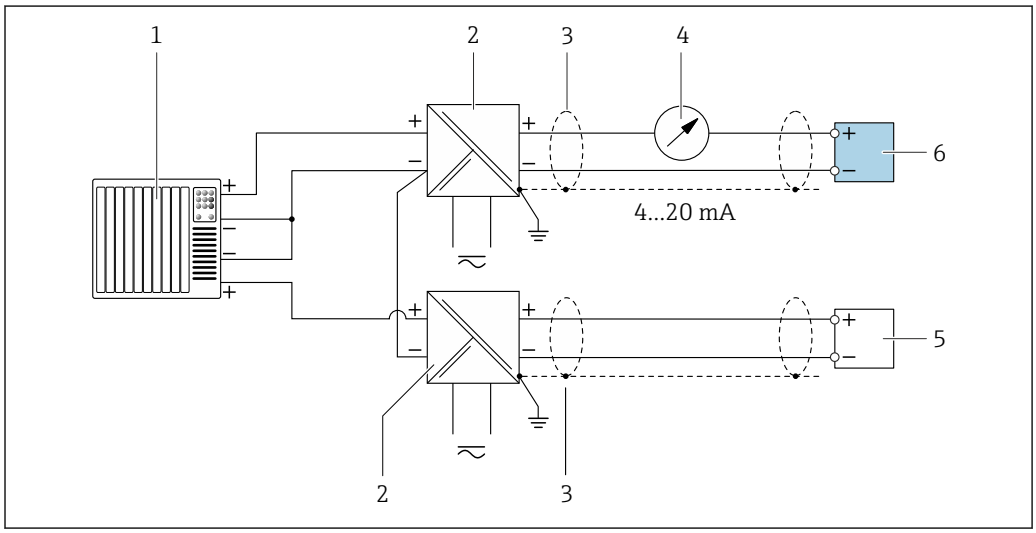

6 Connection example for HART input with a common negative (passive)

1 *Automation system with HART output (e.g. PLC)*
2 *Active barrier for power supply (e.g. RN221N)*
3 *Cable shield: the cable shield must be grounded at both ends to comply with EMC requirements; observe cable specifications*
4 *Analog display unit: observe maximum load → 12*
5 *Pressure measuring device (e.g. Cerabar M, Cerabar S): see requirements*
6 *Transmitter*

Potential equalization

Requirements

No special measures for potential equalization are required.

For devices intended for use in hazardous locations, please observe the guidelines in the Ex documentation (XA).

Terminals

- For device version without integrated overvoltage protection: plug-in spring terminals for wire cross-sections 0.5 to 2.5 mm^2 (20 to 14 AWG)
- For device version with integrated overvoltage protection: screw terminals for wire cross-sections 0.2 to 2.5 mm^2 (24 to 14 AWG)

Cable entries

- Cable gland (not for Ex d): M20 × 1.5 with cable ϕ 6 to 12 mm (0.24 to 0.47 in)
- Thread for cable entry:
  - For non-Ex and Ex: NPT ½"
  - For non-Ex and Ex (not for CSA Ex d/XP): G ½"
  - For Ex d: M20 × 1.5

Cable specification

Permitted temperature range

Minimum requirement: cable temperature range ≥ ambient temperature +20 K

Signal cable

Current output 4 to 20 mA HART

A shielded cable is recommended. Observe grounding concept of the plant.

Current output 4 to 20 mA

Standard installation cable is sufficient.

Pulse/frequency/switch output

Standard installation cable is sufficient.

FOUNDATION Fieldbus

Twisted, shielded two-wire cable.

For further information on planning and installing FOUNDATION Fieldbus networks see:

- Operating Instructions for "FOUNDATION Fieldbus Overview" (BA00013S)
- FOUNDATION Fieldbus Guideline
- IEC 61158-2 (MBP)

PROFIBUS PA

Twisted, shielded two-wire cable. Cable type A is recommended .

For further information on planning and installing PROFIBUS PA networks see:

- Operating Instructions "PROFIBUS DP/PA: Guidelines for planning and commissioning" (BA00034S)
- PNO Directive 2.092 "PROFIBUS PA User and Installation Guideline"
- IEC 61158-2 (MBP)

Overvoltage protection

The device can be ordered with integrated overvoltage protection for diverse approvals:
Order code for "Accessory mounted", option NA "Overvoltage protection"

Input voltage range	Values correspond to supply voltage specifications [1)]
Resistance per channel	2 · 0.5 Ω max
DC sparkover voltage	400 to 700 V
Trip surge voltage	< 800 V
Capacitance at 1 MHz	< 1.5 pF

Nominal discharge current (8/20 µs)	10 kA
Temperature range	−40 to +85 °C (−40 to +185 °F)

1) The voltage is reduced by the amount of the internal resistance $I_{min} \cdot R_i$

Depending on the temperature class, restrictions apply to the ambient temperature for device versions with overvoltage protection

Performance characteristics

Reference operating conditions

- Error limits based on ISO 11631
- Water with +15 to +45 °C (+59 to +113 °F) at2 to 6 bar (29 to 87 psi)
- Specifications as per calibration protocol
- Accuracy based on accredited calibration rigs that are traced to ISO 17025.

To obtain measured errors, use the *Applicator* sizing tool → 🗎 80

Maximum measured error

o.r. = of reading; 1 g/cm³ = 1 kg/l; T = medium temperature

Base accuracy

Design fundamentals → 🗎 31

Mass flow and volume flow (liquids)

±0.10 % o.r.

Mass flow (gases)

±0.25 % o.r.

Density (liquids)

Under reference conditions [g/cm³]	Standard density calibration [g/cm³]	Wide-range Density specification [1) 2)] [g/cm³]
±0.0005	±0.0005	±0.001

1) Valid range for special density calibration: 0 to 2 g/cm³, +5 to +80 °C (+41 to +176 °F)
2) Order code for "Application package", option EE "Special density"

Temperature

±0.5 °C ± 0.005 · T °C (±0.9 °F ± 0.003 · (T − 32) °F)

Zero point stability

DN		Zero point stability	
[mm]	[in]	[kg/h]	[lb/min]
8	⅜	0.180	0.007
15	½	0.585	0.021
25	1	1.62	0.059
40	1½	4.05	0.149

DN		Zero point stability	
[mm]	[in]	[kg/h]	[lb/min]
50	2	6.30	0.231
80	3	16.2	0.617

Flow values

Flow values as turndown parameter depending on nominal diameter.

SI units

DN	1:1	1:10	1:20	1:50	1:100	1:500
[mm]	[kg/h]	[kg/h]	[kg/h]	[kg/h]	[kg/h]	[kg/h]
8	2 000	200	100	40	20	4
15	6 500	650	325	130	65	13
25	18 000	1 800	900	360	180	36
40	45 000	4 500	2 250	900	450	90
50	70 000	7 000	3 500	1 400	700	140
80	180 000	18 000	9 000	3 600	1 800	360

US units

DN	1:1	1:10	1:20	1:50	1:100	1:500
[inch]	[lb/min]	[lb/min]	[lb/min]	[lb/min]	[lb/min]	[lb/min]
⅜	73.50	7.350	3.675	1.470	0.735	0.147
½	238.9	23.89	11.95	4.778	2.389	0.478
1	661.5	66.15	33.08	13.23	6.615	1.323
1½	1 654	165.4	82.70	33.08	16.54	3.308
2	2 573	257.3	128.7	51.46	25.73	5.146
3	6 615	661.5	330.8	132.3	66.15	13.23

Accuracy of outputs

The outputs have the following base accuracy specifications.

Current output

Accuracy	±10 µA

Pulse/frequency output

o.r. = of reading

Accuracy	Max. ±100 ppm o.r.

Repeatability

o.r. = of reading; 1 g/cm^3 = 1 kg/l; T = medium temperature

Base repeatability

Design fundamentals → 31

Mass flow and volume flow (liquids)

±0.05 % o.r.

Mass flow (gases)

±0.20 % o.r.

Density (liquids)

±0.00025 g/cm^3

Temperature

±0.25 °C ± 0.0025 · T °C (±0.45 °F ± 0.0015 · (T−32) °F)

Response time

- The response time depends on the configuration (damping).
- Response time in the event of erratic changes in the measured variable: After 500 ms → 95 % of full scale value

Influence of ambient temperature

Current output

o.r. = of reading

Additional error, in relation to the span of 16 mA:

Temperature coefficient at zero point (4 mA)	0.02 %/10 K
Temperature coefficient with span (20 mA)	0.05 %/10 K

Pulse/frequency output

o.r. = of reading

Temperature coefficient	Max. ±100 ppm o.r.

Influence of medium temperature

Mass flow and volume flow

o.f.s. = of full scale value

When there is a difference between the temperature for zero point adjustment and the process temperature, the additional measured error of the sensor is typically ±0.0002 % o.f.s./°C (±0.0001 % o. f.s./°F).

The effect is reduced if zero point adjustment is performed at process temperature.

Density
When there is a difference between the density calibration temperature and the process temperature, the typical measured error of the sensor is
±0.00005 g/cm^3 /°C (±0.000025 g/cm^3 /°F). Field density calibration is possible.

Wide-range density specification (special density calibration)
If the process temperature is outside the valid range (→ 28) the measured error is
±0.00005 g/cm^3 /°C (±0.000025 g/cm^3 /°F)

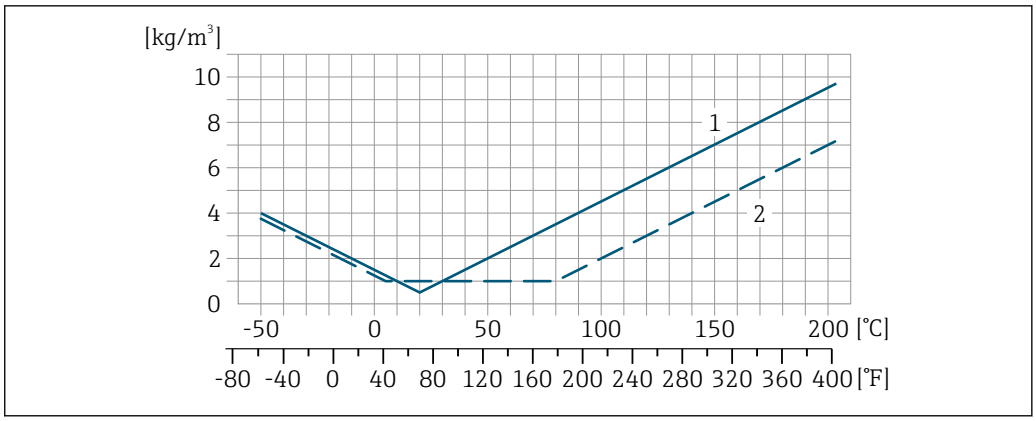

1 *Field density calibration, for example at +20 °C (+68 °F)*
2 *Special density calibration*

Temperature
±0.005 · T °C (± 0.005 · (T − 32) °F)

Influence of medium pressure

The table below shows the effect on accuracy of mass flow due to a difference between calibration pressure and process pressure.

o.r. = of reading

It is possible to compensate for the effect by:
- Reading in the current pressure measured value via the current input.
- Specifying a fixed value for the pressure in the device parameters.

Operating Instructions → 81.

DN		[% o.r./bar]	[% o.r./psi]
[mm]	[in]		
8	3/8	no influence	
15	½	no influence	
25	1	no influence	
40	1½	−0.003	−0.0002
50	2	−0.008	−0.0006
80	3	−0.009	−0.0006

Design fundamentals

o.r. = of reading, o.f.s. = of full scale value

BaseAccu = base accuracy in % o.r., BaseRepeat = base repeatability in % o.r.

MeasValue = measured value; ZeroPoint = zero point stability

Calculation of the maximum measured error as a function of the flow rate

Flow rate	Maximum measured error in % o.r.
$\geq \frac{\text{ZeroPoint}}{\text{BaseAccu}} \cdot 100$ A0021332	± BaseAccu A0021339
$< \frac{\text{ZeroPoint}}{\text{BaseAccu}} \cdot 100$ A0021333	$\pm \frac{\text{ZeroPoint}}{\text{MeasValue}} \cdot 100$ A0021334

Calculation of the maximum repeatability as a function of the flow rate

Flow rate	Maximum repeatability in % o.r.
$\geq \frac{4/3 \cdot \text{ZeroPoint}}{\text{BaseAccu}} \cdot 100$ A0021341	$\pm \frac{1}{2} \cdot \text{BaseAccu}$ A0021343
$< \frac{4/3 \cdot \text{ZeroPoint}}{\text{BaseAccu}} \cdot 100$ A0021342	$\pm \frac{2}{3} \cdot \frac{\text{ZeroPoint}}{\text{MeasValue}} \cdot 100$ A0021344

Example for maximum measured error

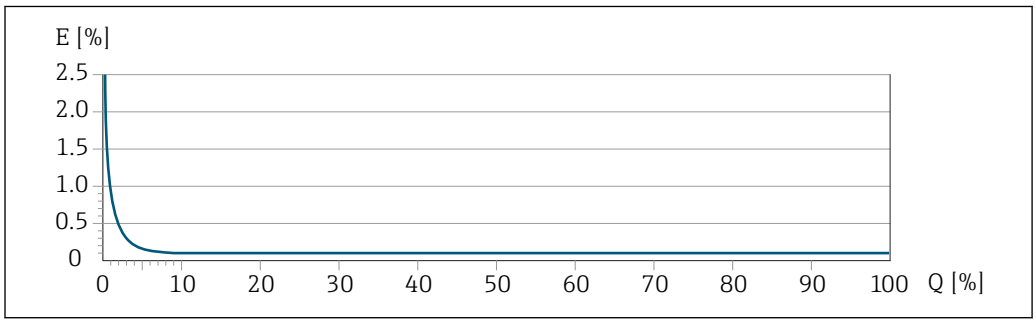

A0018211

E *Maximum measured error in % o.r. (example)*
Q *Flow rate in % of maximum full scale value*

Installation

No special measures such as supports etc. are necessary. External forces are absorbed by the construction of the device.

Mounting location

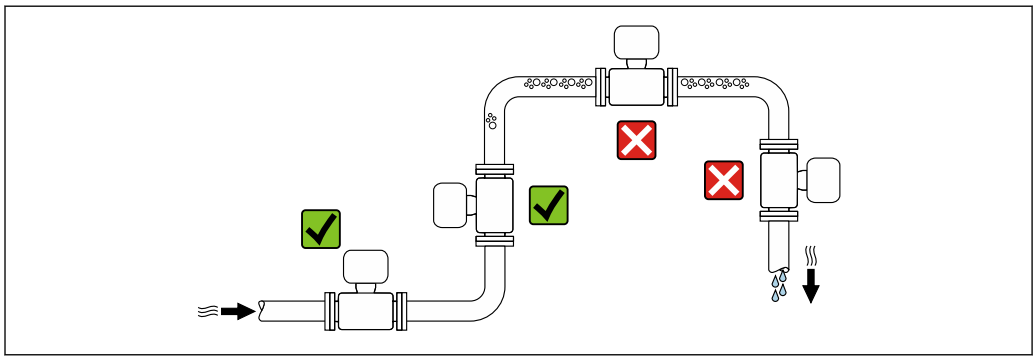

A0028772

To prevent measuring errors arising from accumulation of gas bubbles in the measuring tube, avoid the following mounting locations in the pipe:
- Highest point of a pipeline.
- Directly upstream of a free pipe outlet in a down pipe.

Installation in down pipes

However, the following installation suggestion allows for installation in an open vertical pipeline. Pipe restrictions or the use of an orifice with a smaller cross-section than the nominal diameter prevent the sensor running empty while measurement is in progress.

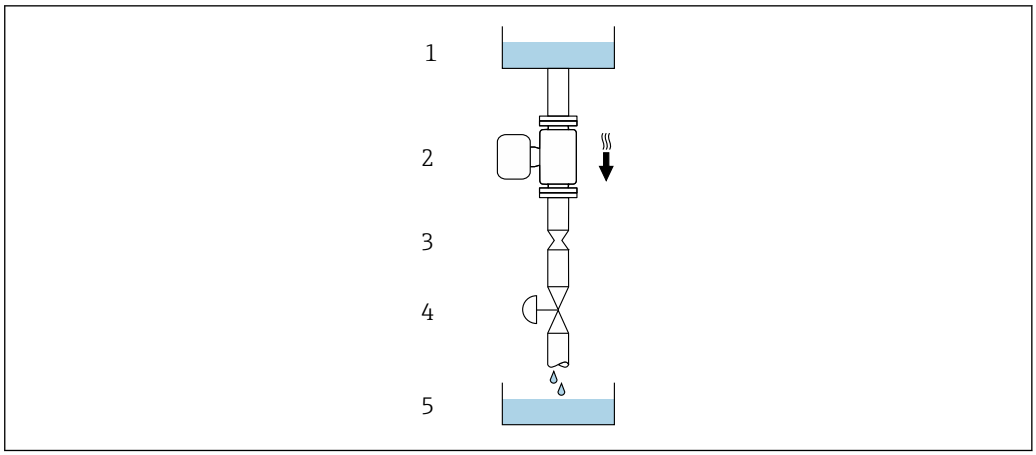

7 *Installation in a down pipe (e.g. for batching applications)*

1 Supply tank
2 Sensor
3 Orifice plate, pipe restriction
4 Valve
5 Batching tank

DN		Ø orifice plate, pipe restriction	
[mm]	[in]	[mm]	[in]
8	⅜	6	0.24
15	½	10	0.40
25	1	14	0.55
40	1½	22	0.87
50	2	28	1.10
80	3	50	1.97

Orientation

The direction of the arrow on the sensor nameplate helps you to install the sensor according to the flow direction (direction of medium flow through the piping).

Orientation			Recommendation
A	Vertical orientation	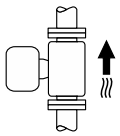 A0015591	✓✓
B	Horizontal orientation, transmitter at top	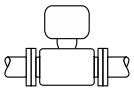 A0015589	✓✓ 1) Exceptions: → 8, 34
C	Horizontal orientation, transmitter at bottom	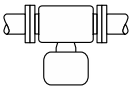 A0015590	✓✓ 2) Exceptions: → 8, 34
D	Horizontal orientation, transmitter at side	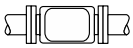 A0015592	✗

1) Applications with low process temperatures may decrease the ambient temperature. To maintain the minimum ambient temperature for the transmitter, this orientation is recommended.
2) Applications with high process temperatures may increase the ambient temperature. To maintain the maximum ambient temperature for the transmitter, this orientation is recommended.

If a sensor is installed horizontally with a curved measuring tube, match the position of the sensor to the fluid properties.

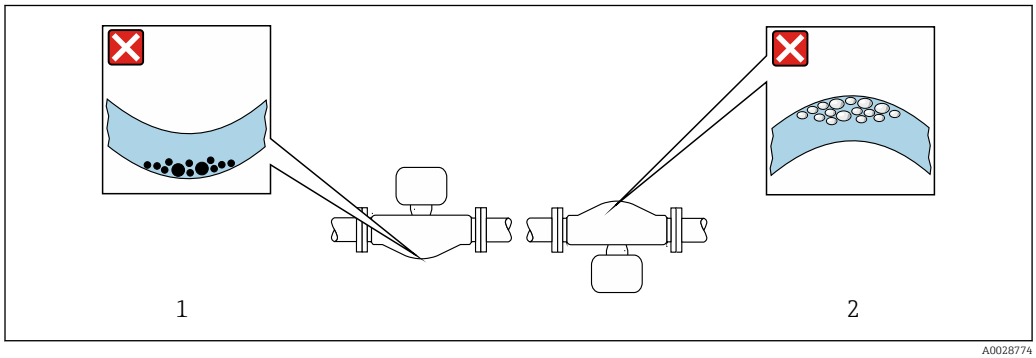

8 Orientation of sensor with curved measuring tube

1 Avoid this orientation for fluids with entrained solids: Risk of solids accumulating.
2 Avoid this orientation for outgassing fluids: Risk of gas accumulating.

Inlet and outlet runs

No special precautions need to be taken for fittings which create turbulence, such as valves, elbows or T-pieces, as long as no cavitation occurs → 42.

Special mounting instructions

Rupture disk

Information that is relevant to the process: (Verweisziel existiert nicht, aber @y.link.required='true').

The position of the rupture disk is indicated on a sticker beside it.

The transportation guard must be removed.

The existing connecting nozzles are not intended for the purpose of rinsing or pressure monitoring, but instead serve as the mounting location for the rupture disk.

In the event of a failure of the rupture disk, a discharge device can be screwed onto the internal thread of the rupture disk in order to drain off any escaping medium.

For information on the dimensions: see the "Mechanical construction -> Accessories" section

Zero point adjustment

All measuring devices are calibrated in accordance with state-of-the-art technology. Calibration takes place under reference conditions→ 28. Therefore, a zero point adjustment in the field is generally not required.

Experience shows that zero point adjustment is advisable only in special cases:
- To achieve maximum measuring accuracy even with low flow rates.
- Under extreme process or operating conditions (e.g. very high process temperatures or very high-viscosity fluids).

Environment

Ambient temperature range

Measuring device	−40 to +60 °C (−40 to +140 °F)
Readability of the local display	−20 to +60 °C (−4 to +140 °F) The readability of the display may be impaired at temperatures outside the temperature range.

- ▶ If operating outdoors:
  Avoid direct sunlight, particularly in warm climatic regions.

You can order a weather protection cover from Endress+Hauser : → 78

Storage temperature

−40 to +80 °C (−40 to +176 °F), preferably at +20 °C (+68 °F)

Climate class

DIN EN 60068-2-38 (test Z/AD)

Degree of protection

Transmitter
- As standard: IP66/67, type 4X enclosure
- When housing is open: IP20, type 1 enclosure
- Display module: IP20, type 1 enclosure

Sensor
IP66/67, type 4X enclosure

Connector
IP67, only in screwed situation

Vibration resistance

- Vibration, sinusoidal according to IEC 60068-2-6
  - 2 to 8.4 Hz, 3.5 mm peak
  - 8.4 to 2 000 Hz, 1 g peak
- Vibration broad-band random, according to IEC 60068-2-64
  - 10 to 200 Hz, 0.003 g^2/Hz
  - 200 to 2 000 Hz, 0.001 g^2/Hz
  - Total: 1.54 g rms

Shock resistance

Shock, half-sine according to IEC 60068-2-27
6 ms 30 g

Impact resistance

Rough handling shocks according to IEC 60068-2-31

Interior cleaning

- Cleaning in place (CIP)
- Sterilization in place (SIP)

Options
- Oil- and grease-free version for wetted parts, without inspection certificate
  Order code for "Service", option **HA**
- Oil- and grease-free version for wetted parts, with inspection certificate according to British Standard – BS IEC 60877:1999+ British Oxygen Cleaning – BOC degreasing specifications 00000-N-S-430-00-01
  Order code for "Service", option **HB**

Electromagnetic compatibility (EMC)

As per IEC/EN 61326 and NAMUR Recommendation 21 (NE 21)

For details, refer to the Declaration of Conformity.

Process

Medium temperature range

Standard version	−50 to +150 °C (−58 to +302 °F)	Order code for "Measuring tube mat., wetted surface", option HA, SA, SB, SC
Extended temperature version	−50 to +205 °C (−58 to +401 °F)	Order code for "Measuring tube mat., wetted surface", option SD, SE, SF, TH

Density

0 to 2 000 kg/m^3 (0 to 125 lb/cf)

Pressure-temperature ratings

The following pressure/temperature diagrams apply to all pressure-bearing parts of the device and not just the process connection. The diagrams show the maximum permissible medium pressure depending on the specific medium temperature.

Pressure-temperature curves with temperature range +151 to +205 °C (+304 to +401 °F) exclusively for extended temperature version of measuring devices.

Flange according to EN 1092-1 (DIN 2501)

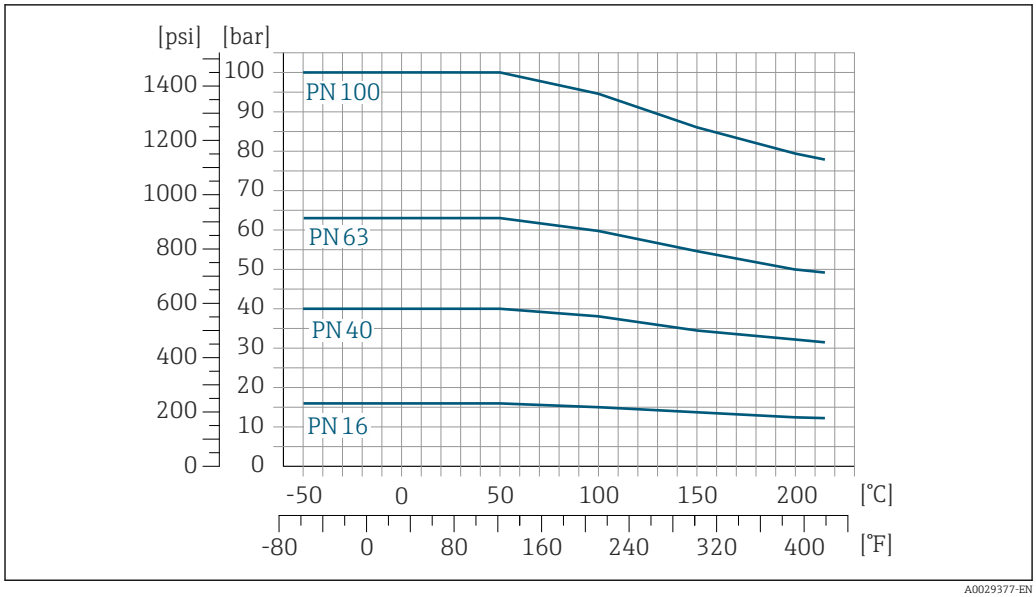

9 *With flange material 1.4404 (F316/F316L), Alloy C22*

Flange according to ASME B16.5

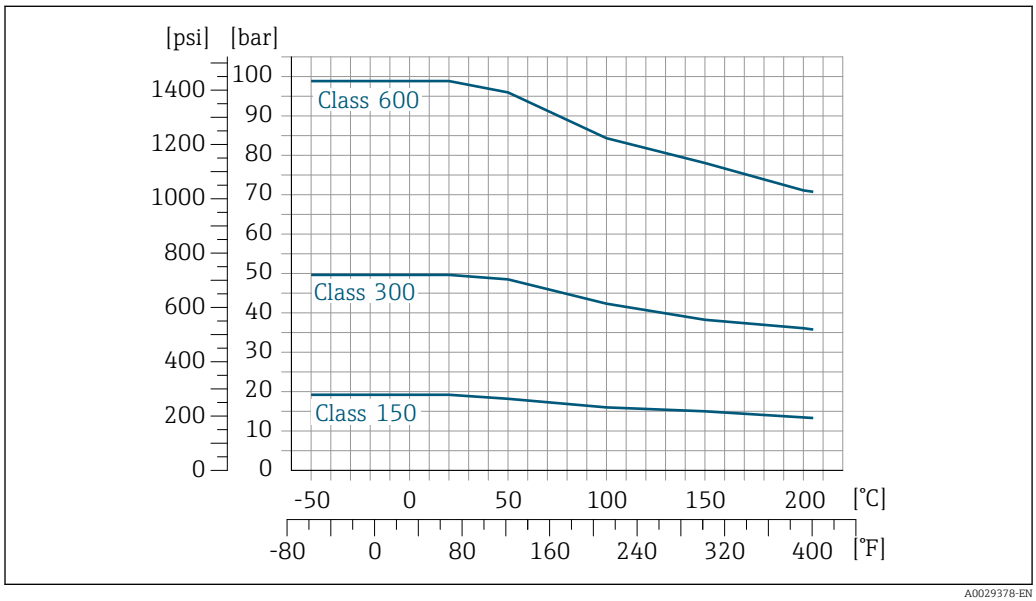

10 *With flange material 1.4404 (F316/F316L)*

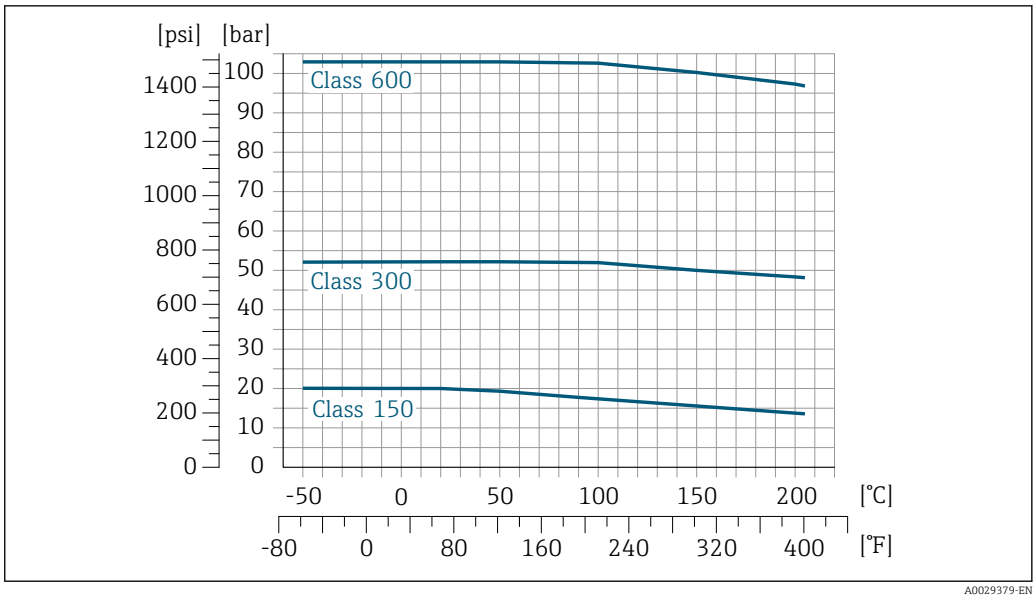

11 *With flange material Alloy C22*

Flange JIS B2220

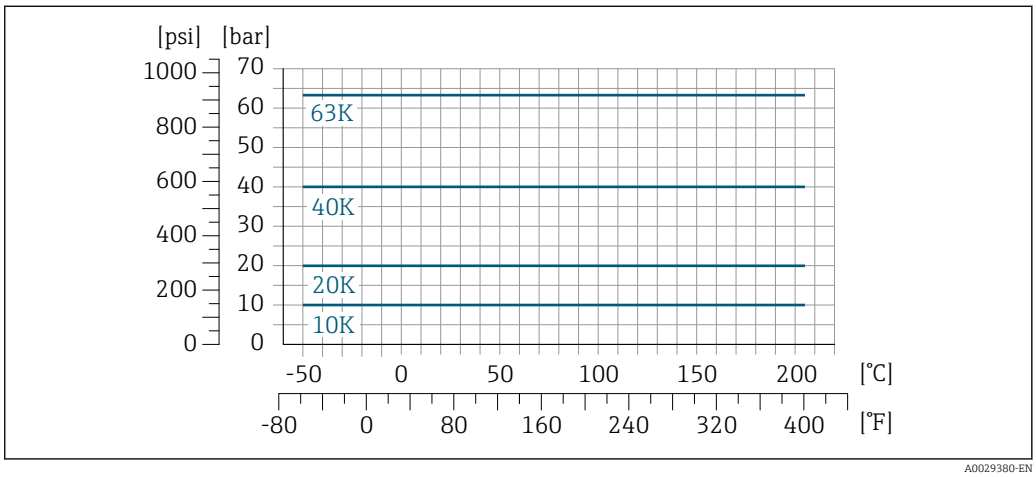

12 *With flange material 1.4404 (F316/F316L), Alloy C22*

Flange DIN 11864-2 Form A

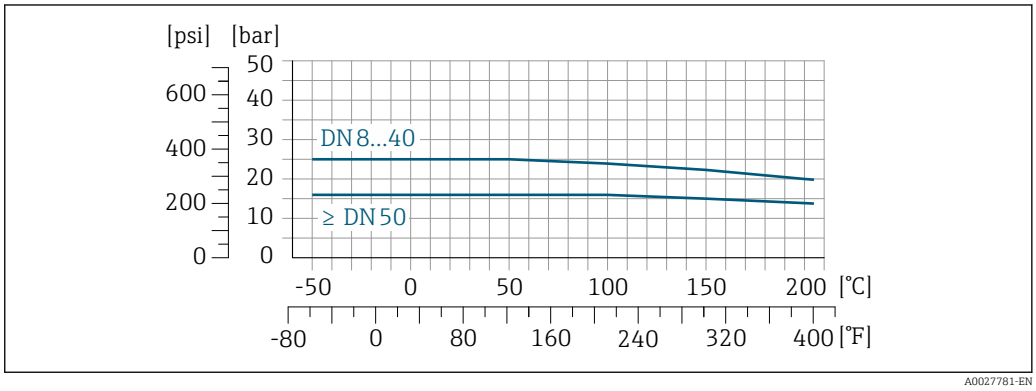

13 *With connection material 1.4404 (316/316L)*

Lap joint flange according to EN 1092-1 (DIN 2501)

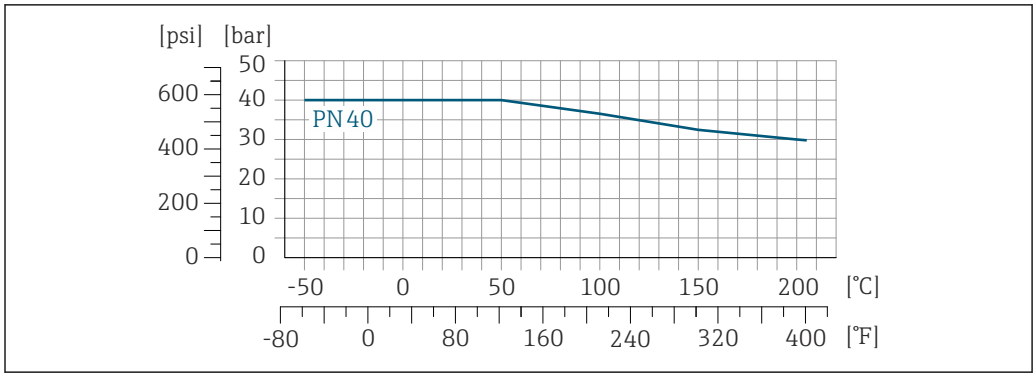

14 *With flange material 1.4301 (F304); wetted parts Alloy C22*

Lap joint flange according to ASME B16.5

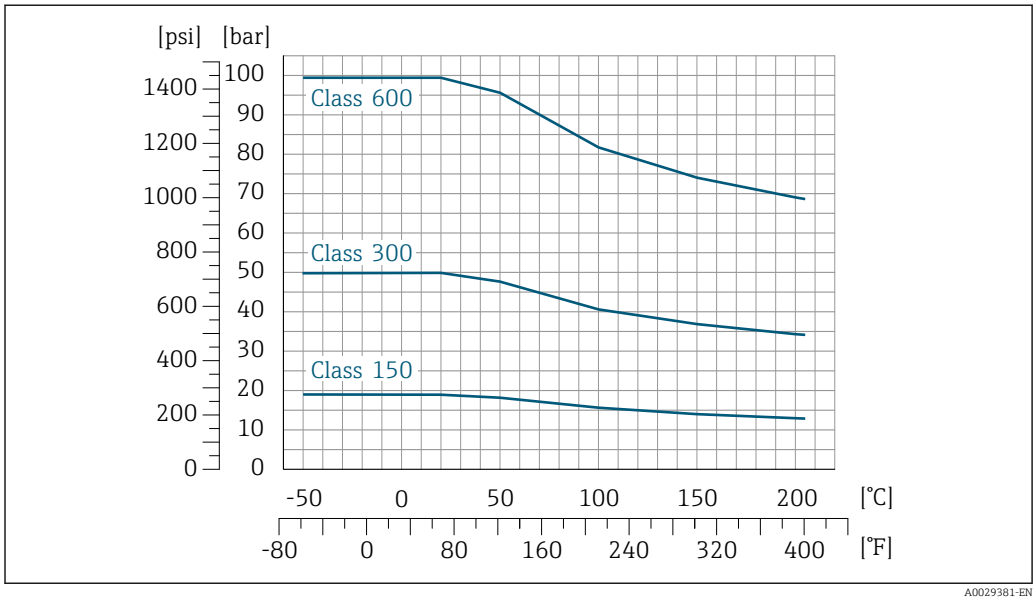

15 *With flange material 1.4301 (F304); wetted parts Alloy C22*

Lap joint flange JIS B2220

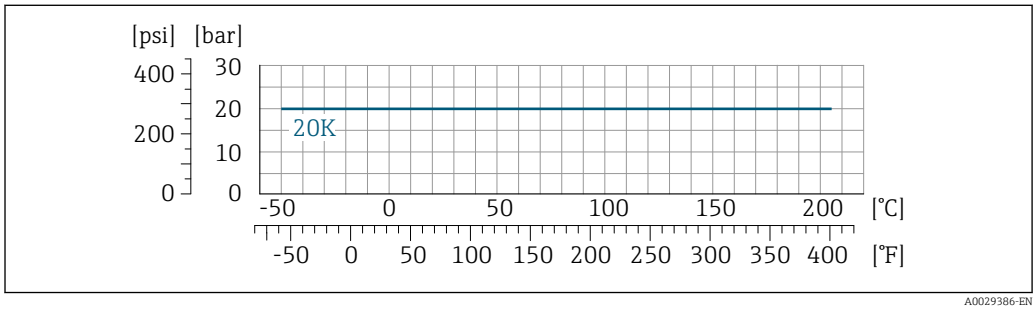

16 *With flange material 1.4301 (F304); wetted parts Alloy C22*

Thread DIN 11851

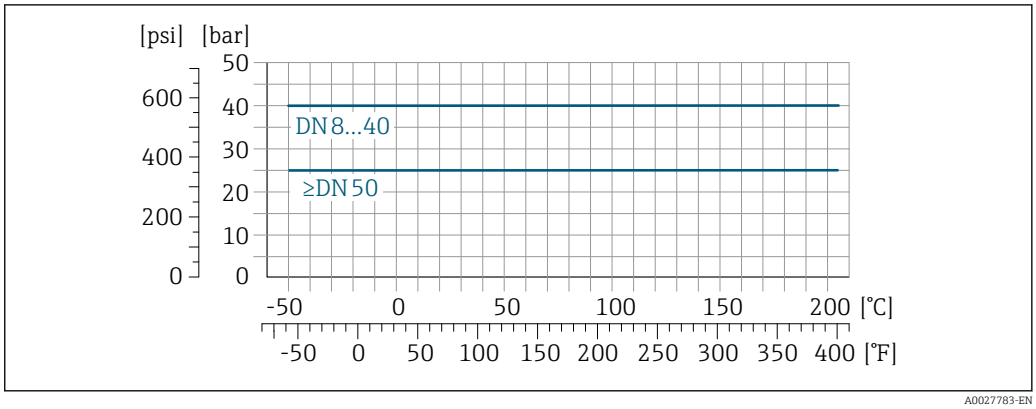

17 *With connection material 1.4404 (316/316L)*

DIN 11851 allows for applications up to +140 °C (+284 °F) if suitable sealing materials are used. Please take this into account when selecting seals and counterparts, as these components can limit the pressure and temperature range.

Thread DIN 11864-1 Form A

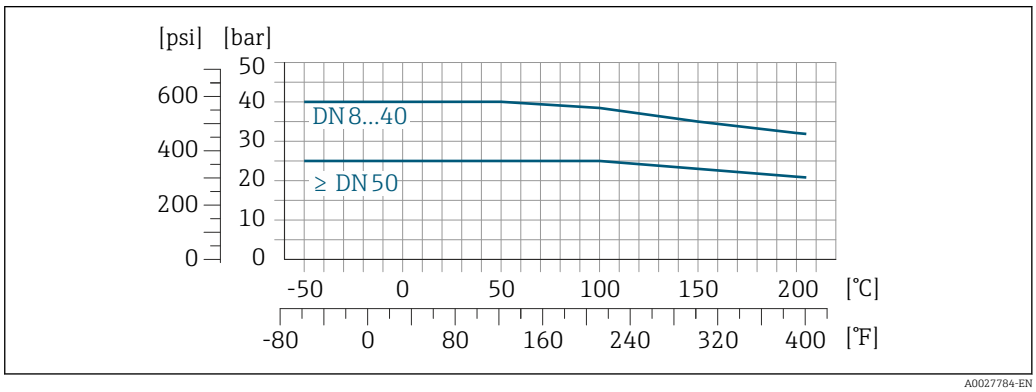

18 *With connection material 1.4404 (316/316L)*

Thread ISO 2853

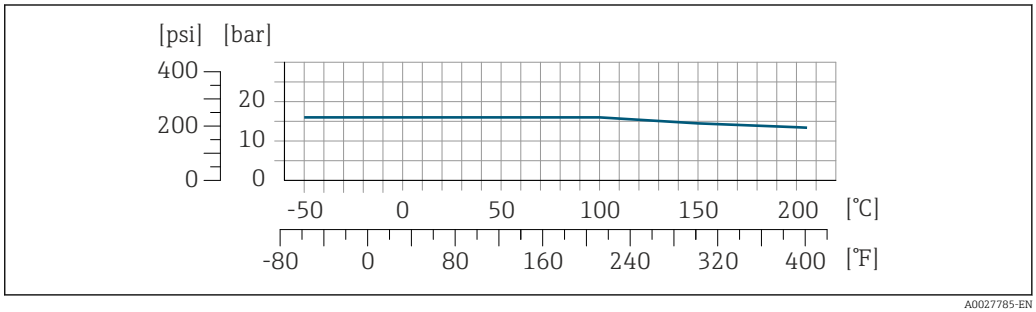

19 *With connection material 1.4404 (316/316L)*

Thread SMS 1145

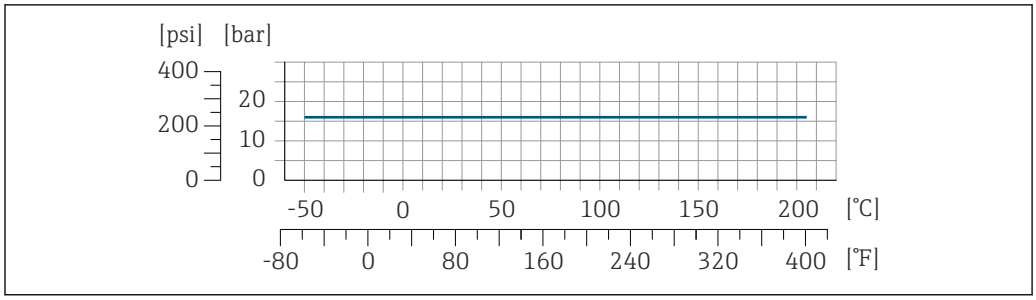

SMS 1145 allows for applications up to 16 bar (232 psi) if suitable sealing materials are used. Please take this into account when selecting seals and counterparts, as these components can limit the pressure and temperature range.

VCO

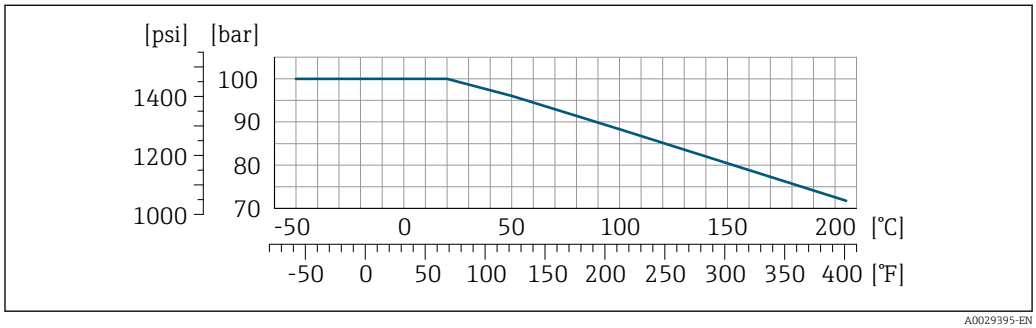

20 With connection material 1.4404 (316/316L)

Tri-Clamp

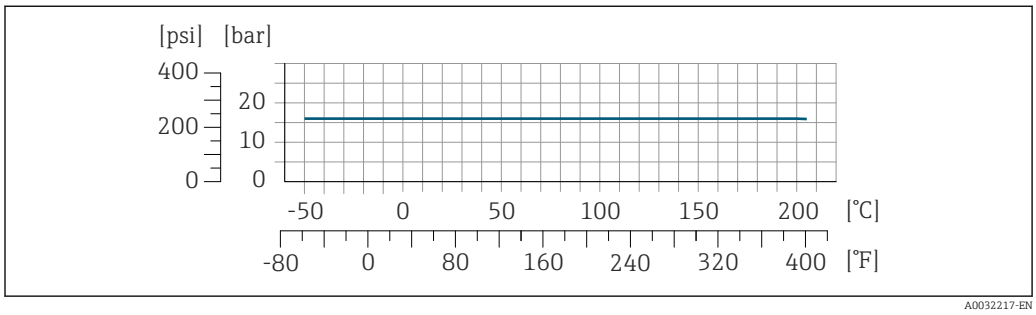

The clamp connections are suitable up to a maximum pressure of 16 bar (232 psi). Please observe the operating limits of the clamp and seal used as they can be over 16 bar (232 psi). The clamp and seal are not included in the scope of supply.

Sensor housing

For standard versions with the temperature range −50 to +150 °C (−58 to +302 °F), the sensor housing is filled with dry nitrogen gas and protects the electronics and mechanics inside.

For all other temperature versions the sensor housing is filled with dry inert gas.

If a measuring tube fails (e.g. due to process characteristics like corrosive or abrasive fluids), the fluid will initially be contained by the sensor housing.

In the event of a tube failure, the pressure level inside the sensor housing will rise according to the operating process pressure. If the user judges that the sensor housing burst pressure does not provide an adequate safety margin, the device can be fitted with a rupture disk. This prevents excessively high pressure from forming inside the sensor housing. Therefore, the use of a rupture

disk is strongly recommended in applications involving high gas pressures, and particularly in applications in which the process pressure is greater than 2/3 of the sensor housing burst pressure.

If there is a need to drain the leaking medium into a discharge device, the sensor should be fitted with a rupture disk. Connect the discharge to the additional threaded connection → 🗎 58.

If the sensor is to be purged with gas (gas detection), it should be equipped with purge connections.

Do not open the purge connections unless the containment can be filled immediately with a dry, inert gas. Use only low pressure to purge.

Maximum pressure:
- DN 08 to 150 (3/8 to 6"): 5 bar (72.5 psi)
- DN 250 (10"):
  - Medium temperature ≤ 100 °C (212 °F): 5 bar (72.5 psi)
  - Medium temperature > 100 °C (212 °F): 3 bar (43.5 psi)

Burst pressure of the sensor housing

The following sensor housing burst pressures are only valid for standard devices and/or devices equipped with closed purge connections (not opened/as delivered).

If a device fitted with purge connections (order code for "Sensor option", option CH "Purge connection") is connected to the purge system, the maximum pressure is determined by the purge system itself or by the device, depending on which component has the lower pressure classification.

If the device is fitted with a rupture disk (order code for "Sensor option", option CA "Rupture disk"), the rupture disk trigger pressure is decisive .

The sensor housing burst pressure refers to a typical internal pressure which is reached prior to mechanical failure of the sensor housing and which was determined during type testing. The corresponding type test declaration can be ordered with the device (order code for "Additional approval", option LN "Sensor housing burst pressure, type test").

DN		Sensor housing burst pressure	
[mm]	[in]	[bar]	[psi]
8	⅜	400	5800
15	½	350	5070
25	1	280	4060
40	1½	260	3770
50	2	180	2610
80	3	120	1740

For information on the dimensions: see the "Mechanical construction" section → 🗎 44

Rupture disk

To increase the level of safety, a device version with a rupture disk with a trigger pressure of 10 to 15 bar (145 to 217.5 psi)can be used (order code for "Sensor option", option CA "rupture disk").

The use of rupture disks cannot be combined with the separately available heating jacket.

For information on the dimensions: see the "Mechanical construction" section (accessories) → 🗎 58

Flow limit

Select the nominal diameter by optimizing between the required flow range and permissible pressure loss.

For an overview of the full scale values for the measuring range, see the "Measuring range" section → 🗎 8

- The minimum recommended full scale value is approx. 1/20 of the maximum full scale value
- In most applications, 20 to 50 % of the maximum full scale value can be considered ideal
- A low full scale value must be selected for abrasive media (such as liquids with entrained solids): flow velocity < 1 m/s (< 3 ft/s).
- For gas measurement the following rules apply:
  - The flow velocity in the measuring tubes should not exceed half the sound velocity (0.5 Mach).
  - The maximum mass flow depends on the density of the gas: formula → 📄 8

To calculate the flow limit, use the *Applicator* sizing tool → 📄 80

Pressure loss

To calculate the pressure loss, use the *Applicator* sizing tool → 📄 80

Promass F with reduced pressure loss: order code for "Sensor option", option CE "Reduced pressure loss"

System pressure

It is important that cavitation does not occur, or that gases entrained in the liquids do not outgas. This is prevented by means of a sufficiently high system pressure.

For this reason, the following mounting locations are recommended:
- At the lowest point in a vertical pipe
- Downstream from pumps (no danger of vacuum)

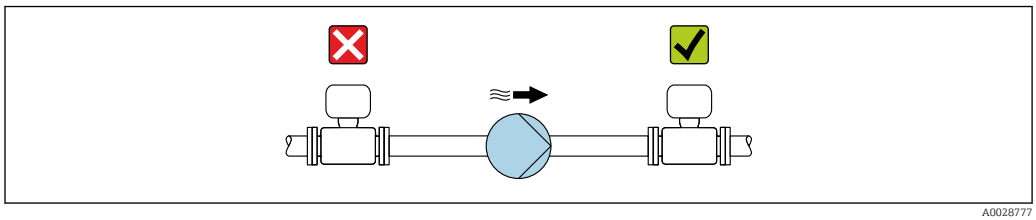

A0028777

Thermal insulation

In the case of some fluids, it is important to keep the heat radiated from the sensor to the transmitter to a low level. A wide range of materials can be used for the required insulation.

The following device versions are recommended for versions with thermal insulation:
Extended temperature version:
Order code for "Measuring tube material", option SD, SE, SF or TH with an extended neck length of 105 mm (4.13 in).

NOTICE

Electronics overheating on account of thermal insulation!
- ▶ Recommended orientation: horizontal orientation, transmitter housing pointing downwards.
- ▶ Do not insulate the transmitter housing .
- ▶ Maximum permissible temperature at the lower end of the transmitter housing: 80 °C (176 °F)
- ▶ Thermal insulation with extended neck free: We recommend that you do not insulate the extended neck in order to ensure optimum dissipation of heat.

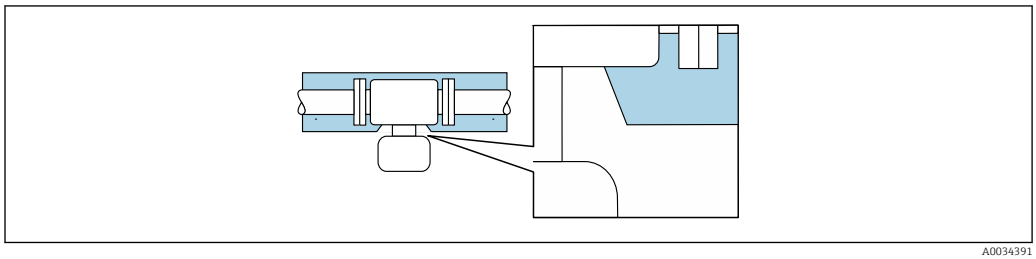

A0034391

21 Thermal insulation with extended neck free

Heating

Some fluids require suitable measures to avoid loss of heat at the sensor.

Heating options
- Electrical heating, e.g. with electric band heaters
- Via pipes carrying hot water or steam
- Via heating jackets

Heating jackets for the sensors can be ordered as accessories from Endress+Hauser. → 📄 79

NOTICE

Danger of overheating when heating

- Ensure that the temperature at the lower end of the transmitter housing does not exceed 80 °C (176 °F).
- Ensure that sufficient convection takes place at the transmitter neck.
- Ensure that a sufficiently large area of the transmitter neck remains exposed. The uncovered part serves as a radiator and protects the electronics from overheating and excessive cooling.
- When using in potentially explosive atmospheres, observe the information in the device-specific Ex documentation. For detailed information on the temperature tables, see the separate document entitled "Safety Instructions" (XA) for the device.

Vibrations

The high oscillation frequency of the measuring tubes ensures that the correct operation of the measuring system is not influenced by plant vibrations.

Mechanical construction

Dimensions in SI units

Compact version

Compact version

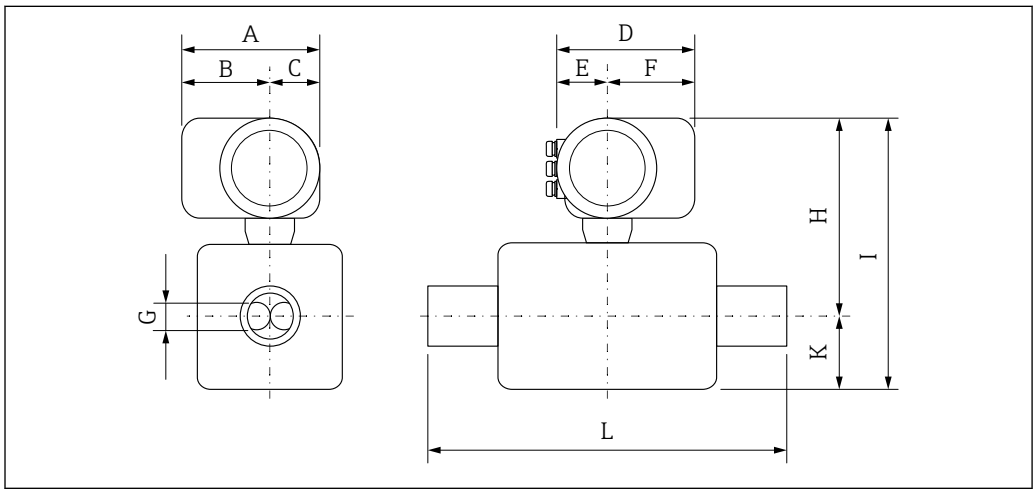

A0029786

Dimensions for version without overvoltage protection

Order code for "Housing", options B "GT18 dual compartment, 316L", C "GT20 dual compartment aluminum coated"

DN [mm]	A [1)] [mm]	B [1)] [mm]	C [mm]	D [2)] [mm]	E [mm]	F [2)] [mm]	G [mm]	H [3)] [mm]	I [3)] [mm]	K [mm]	L [mm]
8	162	102	60	165	75	90	5.35	268	343	75	[4)]
15	162	102	60	165	75	90	8.30	268	343	75	[4)]
25	162	102	60	165	75	90	12.0	268	343	75	[4)]
40	162	102	60	165	75	90	17.6	273	378	105	[4)]
50	162	102	60	165	75	90	26.0	283	424	141	[4)]
80	162	102	60	165	75	90	40.5	302	502	200	[4)]

1) For version without local display: values - 7 mm
2) For versions with overvoltage protection (OVP): values + 8 mm
3) For version without local display: values - 3 mm
4) Dependent on the respective process connection

Flange connections

Fixed flange EN 1092-1, ASME B16.5, JIS B2220

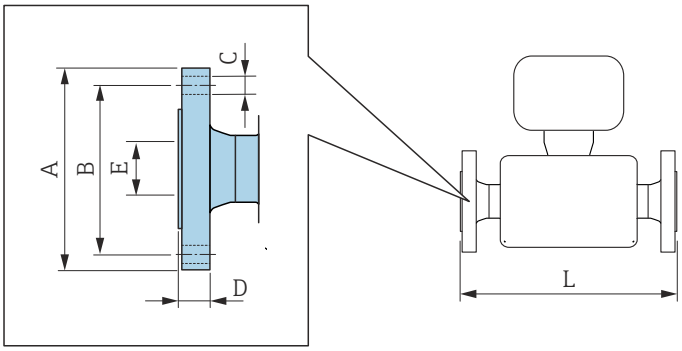

A0015621

Length tolerance for dimension L in mm:
+1.5 / −2.0

Flange according to EN 1092-1 (DIN 2501): PN 40
1.4404 (F316/F316L): *order code for "Process connection", option* **D2S**
Alloy C22: *order code for "Process connection", option* **D2C**

Flange with groove according to EN 1092-1 Form D (DIN 2512N): PN 40
1.4404 (F316/F316L): *order code for "Process connection", option* **D6S**
Alloy C22: *order code for "Process connection", option* **D6C**

DN [mm]	A [mm]	B [mm]	C [mm]	D [mm]	E [mm]	L [mm]
8 [1]	95	65	4 × Ø14	16	17.3	370/510 [2]
15	95	65	4 × Ø14	16	17.3	404/510 [2]
25	115	85	4 × Ø14	18	28.5	440/600 [2]
40	150	110	4 × Ø18	18	43.1	550
50	165	125	4 × Ø18	20	54.5	715/715 [2]
80	200	160	8 × Ø18	24	82.5	840/915 [2]
Surface roughness (flange): EN 1092-1 Form B1 (DIN 2526 Form C), Ra 3.2 to 12.5 µm						

1) DN 8 with DN 15 flanges as standard
2) Installation length in accordance with NAMUR recommendation NE 132 optionally available (order code for "Process connection", option D2N or D6N (with groove))

Flange according to EN 1092-1 (DIN 2501): PN 40 (with DN 25 flanges)
1.4404 (F316/F316L): *order code for "Process connection", option* **R2S**

DN [mm]	A [mm]	B [mm]	C [mm]	D [mm]	E [mm]	L [mm]
8	115	85	4 × Ø14	18	28.5	440
15	115	85	4 × Ø14	18	28.5	440
Surface roughness (flange): EN 1092-1 Form B1 (DIN 2526 Form C), Ra 3.2 to 12.5 µm						

Flange according to EN 1092-1 (DIN 2501): PN 40 with reduction in nominal diameter
1.4404 (F316/F316L)

DN [mm]	reduction to DN [mm]	Order code for "Process connection", option	A [mm]	B [mm]	C [mm]	D [mm]	E [mm]	L [mm]
50	40	DFS	165	125	4 × Ø18	20	54.5	555
80	50	DGS	200	160	8 × Ø18	24	82.5	840
100	80	DIS	235	190	8 × Ø22	24	107.1	874

Surface roughness (flange): EN 1092-1 Form B1 (DIN 2526 Form C), Ra 3.2 to 12.5 µm

Flange according to EN 1092-1 (DIN 2501): PN 63
1.4404 (F316/F316L): *order code for "Process connection", option* **D3S**
Alloy C22: *order code for "Process connection", option* **D3C**

Flange with groove according to EN 1092-1 Form D (DIN 2512N): PN 63
1.4404 (F316/F316L): *order code for "Process connection", option* **D7S**
Alloy C22: *order code for "Process connection", option* **D7C**

DN [mm]	A [mm]	B [mm]	C [mm]	D [mm]	E [mm]	L [mm]
50	180	135	4 × Ø22	26	54.5	724
80	215	170	8 × Ø22	28	81.7	875

Surface roughness (flange):
EN 1092-1 Form B1 (DIN 2526 Form C), Ra 3.2 to 12.5 µm EN 1092-1 Form B2 (DIN 2526 Form E), Ra 0.8 to 3.2 µm

Flange according to EN 1092-1 (DIN 2501): PN 100
1.4404 (F316/F316L): *order code for "Process connection", option* **D4S**
Alloy C22: *order code for "Process connection", option* **D4C**

Flange with groove according to EN 1092-1 Form D (DIN 2512N): PN 100
1.4404 (F316/F316L): *order code for "Process connection", option* **D8S**
Alloy C22: *order code for "Process connection", option* **D8C**

DN [mm]	A [mm]	B [mm]	C [mm]	D [mm]	E [mm]	L [mm]
8 [1)]	105	75	4 × Ø14	20	17.3	400
15	105	75	4 × Ø14	20	17.3	420
25	140	100	4 × Ø18	24	28.5	470
40	170	125	4 × Ø22	26	42.5	590
50	195	145	4 × Ø26	28	53.9	740
80	230	180	8 × Ø26	32	80.9	885

Surface roughness (flange): EN 1092-1 Form B2 (DIN 2526 Form E), Ra 0.8 to 3.2 µm

1) DN 8 with DN 15 flanges as standard

Flange according to ASME B16.5: Class 150
1.4404 (F316/F316L): *order code for "Process connection", option* **AAS**
Alloy C22: *order code for "Process connection", option* **AAC**

DN [mm]	A [mm]	B [mm]	C [mm]	D [mm]	E [mm]	L [mm]
8 [1)]	90	60.3	4 × Ø15.7	11.2	15.7	370
15	90	60.3	4 × Ø15.7	11.2	15.7	404
25	110	79.4	4 × Ø15.7	14.2	26.7	440

Flange according to ASME B16.5: Class 150 **1.4404 (F316/F316L):** *order code for "Process connection", option* **AAS** **Alloy C22:** *order code for "Process connection", option* **AAC**						
DN [mm]	**A [mm]**	**B [mm]**	**C [mm]**	**D [mm]**	**E [mm]**	**L [mm]**
40	125	98.4	4 × Ø15.9	15.9	40.9	550
50	150	120.7	4 × Ø19.1	19.1	52.6	715
80	190	152.4	4 × Ø19.1	23.9	78.0	840
Surface roughness (flange): Ra 3.2 to 6.3 µm						

1) DN 8 with DN 15 flanges as standard

Flange according to ASME B16.5: Class 150 with reduction in nominal diameter **1.4404 (F316/F316L)**								
DN [mm]	**reduction to DN [mm]**	**Order code for "Process connection", option**	**A [mm]**	**B [mm]**	**C [mm]**	**D [mm]**	**E [mm]**	**L [mm]**
50	40	AHS	150	120.7	4 × Ø19.1	19.1	52.6	550
80	50	AJS	190	152.4	4 × Ø19.1	23.9	78.0	720
100	80	ALS	230	190.5	8 × Ø19.1	23.9	102.4	874
Surface roughness (flange): Ra 3.2 to 6.3 µm								

Flange according to ASME B16.5: Class 300 **1.4404 (F316/F316L):** *order code for "Process connection", option* **ABS** **Alloy C22:** *order code for "Process connection", option* **ABC**						
DN [mm]	**A [mm]**	**B [mm]**	**C [mm]**	**D [mm]**	**E [mm]**	**L [mm]**
8 [1)]	95	66.7	4 × Ø15.7	14.2	15.7	370
15	95	66.7	4 × Ø15.7	14.2	15.7	404
25	125	88.9	4 × Ø19.1	17.5	26.7	440
40	155	114.3	4 × Ø22.3	20.6	40.9	550
50	165	127	8 × Ø19.1	22.3	52.6	715
80	210	168.3	8 × Ø22.3	28.4	78.0	840
Surface roughness (flange): Ra 3.2 to 6.3 µm						

1) DN 8 with DN 15 flanges as standard

Flange according to ASME B16.5: Class 300 with reduction in nominal diameter **1.4404 (F316/F316L)**								
DN [mm]	**reduction to DN [mm]**	**Order code for "Process connection", option**	**A [mm]**	**B [mm]**	**C [mm]**	**D [mm]**	**E [mm]**	**L [mm]**
50	40	AIS	165	127	8 × Ø19.1	22.3	52.6	615
80	50	AKS	210	168.3	8 × Ø22.3	28.4	78.0	732
100	80	AMS	255	200	8 × Ø22.3	31.7	102.4	894
Surface roughness (flange): Ra 3.2 to 6.3 µm								

Flange according to ASME B16.5: Class 600 **1.4404 (F316/F316L):** *order code for "Process connection", option* **ACS** **Alloy C22:** *order code for "Process connection", option* **ACC**						
DN [mm]	**A [mm]**	**B [mm]**	**C [mm]**	**D [mm]**	**E [mm]**	**L [mm]**
8 [1]	95	66.7	4 × Ø15.7	20.6	13.9	400
15	95	66.7	4 × Ø15.7	20.6	13.9	420
25	125	88.9	4 × Ø19.1	23.9	24.3	490
40	155	114.3	4 × Ø22.3	28.7	38.1	600
50	165	127	8 × Ø19.1	31.8	49.2	742
80	210	168.3	8 × Ø22.3	38.2	73.7	900
Surface roughness (flange): Ra 3.2 to 6.3 µm						

1) DN 8 with DN 15 flanges as standard

Flange JIS B2220: 10K **1.4404 (F316/F316L):** *order code for "Process connection", option* **NDS** **Alloy C22:** *order code for "Process connection", option* **NDC**						
DN [mm]	**A [mm]**	**B [mm]**	**C [mm]**	**D [mm]**	**E [mm]**	**L [mm]**
50	155	120	4 × Ø19	16	50	715
80	185	150	8 × Ø19	18	80	832
Surface roughness (flange): Ra 3.2 to 6.3 µm						

Flange JIS B2220: 20K **1.4404 (F316/F316L):** *order code for "Process connection", option* **NES** **Alloy C22:** *order code for "Process connection", option* **NEC**						
DN [mm]	**A [mm]**	**B [mm]**	**C [mm]**	**D [mm]**	**E [mm]**	**L [mm]**
8 [1]	95	70	4 × Ø15	14	15	370
15	95	70	4 × Ø15	14	15	404
25	125	90	4 × Ø19	16	25	440
40	140	105	4 × Ø19	18	40	550
50	155	120	8 × Ø19	18	50	715
80	200	160	8 × Ø23	22	80	832
Surface roughness (flange): Ra 1.6 to 3.2 µm						

1) DN 8 with DN 15 flanges as standard

Flange JIS B2220: 40K **1.4404 (F316/F316L):** *order code for "Process connection", option* **NGS** **Alloy C22:** *order code for "Process connection", option* **NGC**						
DN [mm]	**A [mm]**	**B [mm]**	**C [mm]**	**D [mm]**	**E [mm]**	**L [mm]**
8 [1]	115	80	4 × Ø19	20	15	400
15	115	80	4 × Ø19	20	15	425
25	130	95	4 × Ø19	22	25	485
40	160	120	4 × Ø23	24	38	600
50	165	130	8 × Ø19	26	50	760

Flange JIS B2220: 40K **1.4404 (F316/F316L):** *order code for "Process connection", option* **NGS** **Alloy C22:** *order code for "Process connection", option* **NGC**						
DN [mm]	**A [mm]**	**B [mm]**	**C [mm]**	**D [mm]**	**E [mm]**	**L [mm]**
80	210	170	8 × Ø23	32	75	890
Surface roughness (flange): Ra 1.6 to 3.2 µm						

1) DN 8 with DN 15 flanges as standard

Flange JIS B2220: 63K **1.4404 (F316/F316L):** *order code for "Process connection", option* **NHS** **Alloy C22:** *order code for "Process connection", option* **NHC**						
DN [mm]	**A [mm]**	**B [mm]**	**C [mm]**	**D [mm]**	**E [mm]**	**L [mm]**
8 [1)]	120	85	4 × Ø19	23	12	420
15	120	85	4 × Ø19	23	12	440
25	140	100	4 × Ø23	27	22	494
40	175	130	4 × Ø25	32	35	620
50	185	145	8 × Ø23	34	48	775
80	230	185	8 × Ø25	40	73	915
Surface roughness (flange): Ra 1.6 to 3.2 µm						

1) DN 8 with DN 15 flanges as standard

Fixed flange DIN 11864-2

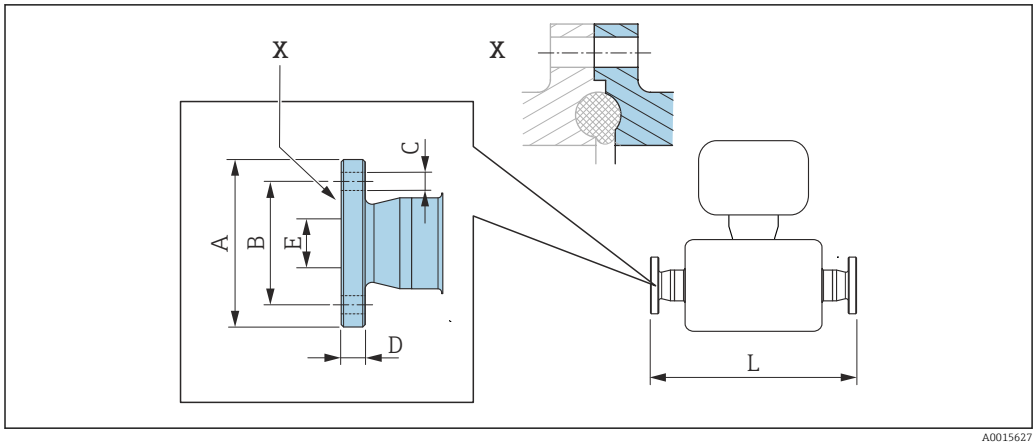

22 *Detail X: Asymmetrical process connection; the part shown in blue is provided by the supplier.*

Length tolerance for dimension L in mm:
+1.5 / −2.0

Flange DIN11864-2 Form A, for pipe according to DIN11866 series A, flat with notch 1.4404 (316/316L) *Order code for "Process connection", option* **KCS**						
DN [mm]	**A [mm]**	**B [mm]**	**C [mm]**	**D [mm]**	**E [mm]**	**L [mm]**
8	54	37	4 × Ø9	10	10	387
15	59	42	4 × Ø9	10	16	418
25	70	53	4 × Ø9	10	26	454
40	82	65	4 × Ø9	10	38	560
50	94	77	4 × Ø9	10	50	720
80	133	112	8 × Ø11	12	81	900
3A version available: order code for "Additional approval", option LP in conjunction with Ra_{max} = 0.76 µm: order code for "Measuring tube material", option SB, SE or Ra_{max} = 0.38 µm: order code for "Measuring tube material", option SC, SF Ra_{max} = 0.38 µm electropolished: order code for "Measuring tube material", option BC						

Lap joint flange EN 1092-1, ASME B16.5, JIS B2220

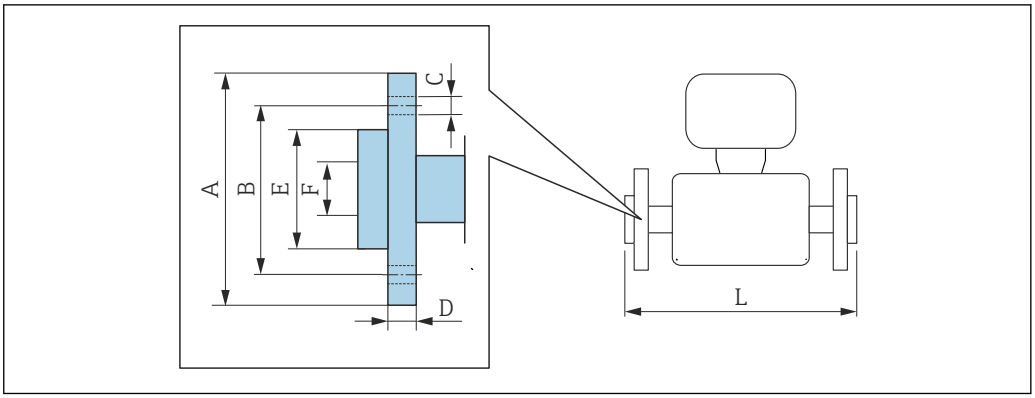

A0022221

Length tolerance for dimension L in mm:
+1.5 / −2.0

Lap joint flange according to EN 1092-1 Form D: PN 40 **1.4301 (F304)**, *wetted parts Alloy C22* *Order code for "Process connection", option* **DAC**								
DN [mm]	**A [mm]**	**B [mm]**	**C [mm]**	**D [mm]**	**E [mm]**	**F [mm]**	**L [mm]**	**L_{diff} 1) [mm]**
8 2)	95	65	4 × Ø14	14.5	45	17.3	370	0
15	95	65	4 × Ø14	14.5	45	17.3	404	0
25	115	85	4 × Ø14	16.5	68	28.5	444	+4
40	150	110	4 × Ø18	21	88	43.1	560	+10
50	165	125	4 × Ø18	23	102	54.5	719	+4
80	200	160	8 × Ø18	29	138	82.5	848	+8
Surface roughness (flange): Ra 3.2 to 12.5 µm								

1) Difference to installation length of the welding neck flange (order code for "Process connection", option D2C)
2) DN 8 with DN 15 flanges as standard

Lap joint flange according to ASME B16.5: Class 150 **1.4301 (F304)**, *wetted parts Alloy C22* *Order code for "Process connection", option* **ADC**								
DN [mm]	**A [mm]**	**B [mm]**	**C [mm]**	**D [mm]**	**E [mm]**	**F [mm]**	**L [mm]**	**L_{diff} 1) [mm]**
8 2)	90	60.3	4 × Ø 15.7	15	35.1	15.7	370	0
15	90	60.3	4 × Ø 15.7	15	35.1	15.7	404	0
25	110	79.4	4 × Ø 15.7	16	50.8	26.7	440	0
40	125	98.4	4 × Ø 15.7	15.9	73.2	40.9	550	0
50	150	120.7	4 × Ø 19.1	19	91.9	52.6	715	0
80	190	152.4	4 × Ø 19.1	22.3	127.0	78.0	840	0
Surface roughness (flange): Ra 3.2 to 12.5 µm								

1) Difference to installation length of the welding neck flange (order code for "Process connection", option AAC)
2) DN 8 with DN 15 flanges as standard

Lap joint flange according to ASME B16.5: Class 300 **1.4301 (F304)**, *wetted parts Alloy C22* *Order code for "Process connection", option* **AEC**								
DN [mm]	**A [mm]**	**B [mm]**	**C [mm]**	**D [mm]**	**E [mm]**	**F [mm]**	**L [mm]**	**L_{diff} [1] [mm]**
8 [2]	95	66.7	4 × Ø 15.7	16.5	35.1	15.7	376	+6
15	95	66.7	4 × Ø 15.7	16.5	35.1	15.7	406	+2
25	125	88.9	4 × Ø 19.1	21.0	50.8	26.7	450	+10
40	155	114.3	4 × Ø 22.3	23.0	73.2	40.9	564	+14
50	165	127	8 × Ø 19.1	25.5	91.9	52.6	717	+2
80	210	168.3	8 × Ø 22.3	31.0	127.0	78.0	852.6	+12.6
Surface roughness (flange): Ra 3.2 to 12.5 µm								

1) Difference to installation length of the welding neck flange (order code for "Process connection", option ABC)
2) DN 8 with DN 15 flanges as standard

Lap joint flange according to ASME B16.5: Class 600 **1.4301 (F304)**, *wetted parts Alloy C22* *Order code for "Process connection", option* **AFC**								
DN [mm]	**A [mm]**	**B [mm]**	**C [mm]**	**D [mm]**	**E [mm]**	**F [mm]**	**L [mm]**	**L_{diff} [1] [mm]**
8 [2]	95	66.7	4 × Ø 15.7	17.0	35.1	13.9	400	0
15	95	66.7	4 × Ø 15.7	17.0	35.1	13.9	420	0
25	125	88.9	4 × Ø 19.1	21.5	50.8	24.3	490	0
40	155	114.3	4 × Ø 22.3	25.0	73.2	38.1	600	0
50	165	127	8 × Ø 19.1	28.0	91.9	49.2	742	0
80	210	168.3	8 × Ø 22.3	35.0	127.0	73.7	900	0
Surface roughness (flange): Ra 3.2 to 12.5 µm								

1) Difference to installation length of the welding neck flange (order code for "Process connection", option ACC)
2) DN 8 with DN 15 flanges as standard

Lap joint flange JIS B2220: 20K **1.4301 (F304)**, *wetted parts Alloy C22* *Order code for "Process connection", option* **NIC**								
DN [mm]	**A [mm]**	**B [mm]**	**C [mm]**	**D [mm]**	**E [mm]**	**F [mm]**	**L [mm]**	**L_{diff} [1] [mm]**
8 [2]	95	70	4 × Ø 15	14	51	15	370	0
15	95	70	4 × Ø 15	14	51	15	404	0
25	125	90	4 × Ø 19	18.5	67	25	440	0
40	140	105	4 × Ø 19	18.5	81	40	550	0
50	155	120	8 × Ø 19	23	96	50	715	0
80	200	160	8 × Ø 23	29	132	80	844	+12
Surface roughness (flange): Ra 3.2 to 12.5 µm								

1) Difference to installation length of the welding neck flange (order code for "Process connection", option NEC)
2) DN 8 with DN 15 flanges as standard

Clamp connections

Tri-Clamp

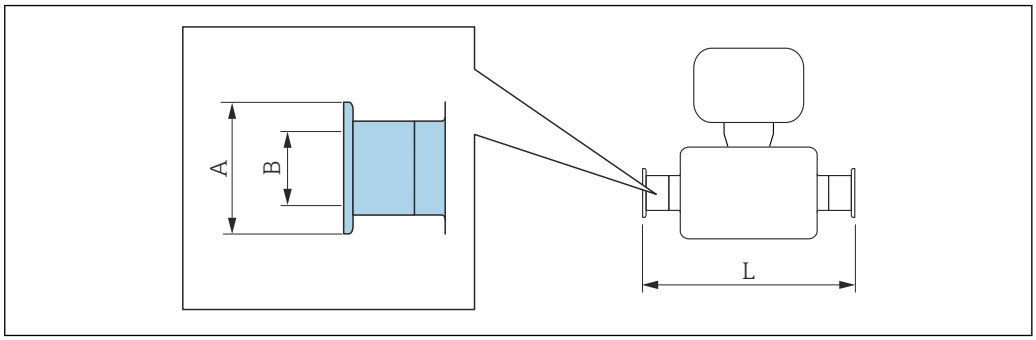

A0015625

Length tolerance for dimension L in mm:
+1.5 / −2.0

Tri-Clamp (½"), for pipe according to DIN 11866 series C **1.4404 (316/316L)** *Order code for "Process connection", option* **FDW**				
DN [mm]	**Clamp [in]**	**A [mm]**	**B [mm]**	**L [mm]**
8	½	25.0	9.5	367
15	½	25.0	9.5	398
3-A version available: order code for "Additional approval", option LP in conjunction with Ra_{max} = 0.76 µm: order code for "Measuring tube material", option SB, SE or Ra_{max} = 0.38 µm: order code for "Measuring tube material", option SC, SF Ra_{max} = 0.38 µm electropolished: order code for "Measuring tube material", option BC				

Tri-Clamp (≥ 1"), for pipe according to DIN 11866 series C **1.4404 (316/316L)** *Order code for "Process connection", option* **FTS**				
DN [mm]	**Clamp [in]**	**A [mm]**	**B [mm]**	**L [mm]**
8	1	50.4	22.1	367
15	1	50.4	22.1	398
25	1	50.4	22.1	434
40	1½	50.4	34.8	560
50	2	63.9	47.5	720
80	3	90.9	72.9	900
3-A version available: order code for "Additional approval", option LP in conjunction with Ra_{max} = 0.76 µm: order code for "Measuring tube material", option SB, SE or Ra_{max} = 0.38 µm: order code for "Measuring tube material", option SC, SF Ra_{max} = 0.38 µm electropolished: order code for "Measuring tube material", option BC				

Threaded couplings

Thread DIN 11851, DIN11864-1, SMS 1145

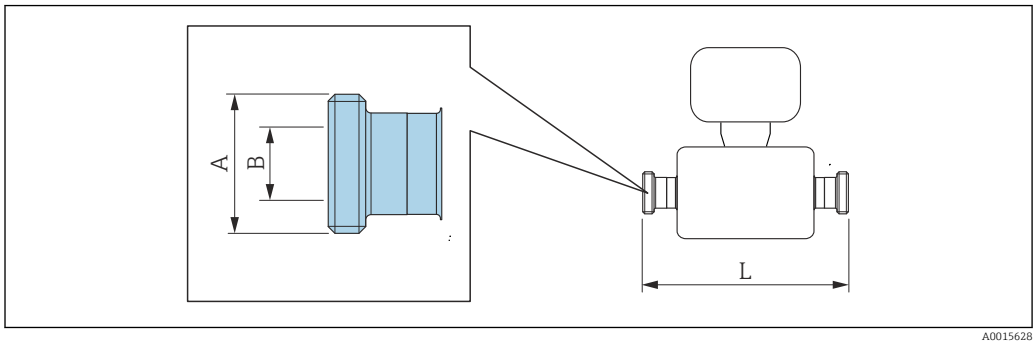

Length tolerance for dimension L in mm:
+1.5 / −2.0

Thread DIN 11851, for pipe according to DIN11866, series A 1.4404 (316/316L) *Order code for "Process connection", option* **FMW**			
DN [mm]	**A [in]**	**B [mm]**	**L [mm]**
8	Rd 34 × ⅛	16	367
15	Rd 34 × ⅛	16	398
25	Rd 52 × ⅙	26	434
40	Rd 65 × ⅙	38	560
50	Rd 78 × ⅙	50	720
80	Rd 110 × ¼	81	900
3-A version available: order code for "Additional approval", option LP in conjunction with Ra_{max} = 0.76 µm: order code for "Measuring tube material", option SB, SE			

Thread DIN11864-1 Form A, for pipe according to DIN11866, series A 1.4404 (316/316L) *Order code for "Process connection", option* **FLW**			
DN [mm]	**A [in]**	**B [mm]**	**L [mm]**
8	Rd 28 × ⅛	10	367
15	Rd 34 × ⅛	16	398
25	Rd 52 × ⅛	26	434
40	Rd 65 × ⅙	38	560
50	Rd 78 × ⅙	50	720
80	Rd 110 × ¼	81	900
3-A version available: order code for "Additional approval", option LP in conjunction with Ra_{max} = 0.76 µm: order code for "Measuring tube material", option SB, SE or Ra_{max} = 0.38 µm: order code for "Measuring tube material", option SC, SF Ra_{max} = 0.38 µm electropolished: order code for "Measuring tube material", option BC			

Thread SMS 1145 **1.4404 (316/316L)** *Order code for "Process connection", option* **SCS**			
DN **[mm]**	**A** **[in]**	**B** **[mm]**	**L** **[mm]**
8	Rd 40 × 1/6	22.6	367
15	Rd 40 × 1/6	22.6	398
25	Rd 40 × 1/6	22.6	434
40	Rd 60 × 1/6	35.6	560
50	Rd 70 × 1/6	48.6	720
80	Rd 98 × 1/6	72.9	900
3-A version available: order code for "Additional approval", option LP in conjunction with Ra_{max} = 0.76 µm: order code for "Measuring tube material", option SB, SE			

Thread ISO 2853

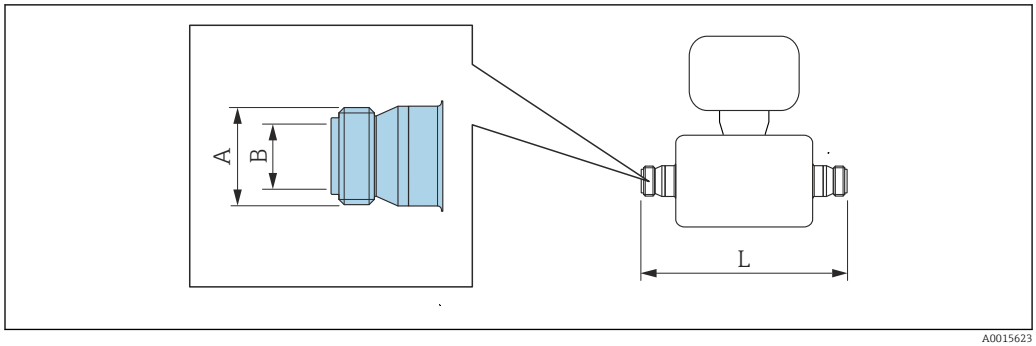

Length tolerance for dimension L in mm:
+1.5 / −2.0

Thread ISO 2853, for pipe according to ISO 2037 **1.4404 (316/316L)** *Order code for "Process connection", option* **JSF**			
DN **[mm]**	**A** [1] **[mm]**	**B** **[mm]**	**L** **[mm]**
8	37.13	22.6	367
15	37.13	22.6	398
25	37.13	22.6	434
40	52.68	35.6	560
50	64.16	48.6	720
80	91.19	72.9	900
3-A version available: order code for "Additional approval", option LP in conjunction with Ra_{max} = 0.76 µm: order code for "Measuring tube material", option SB, SE or Ra_{max} = 0.38 µm: order code for "Measuring tube material", option SC, SF Ra_{max} = 0.38 µm electropolished: order code for "Measuring tube material", option BC			

1) Max. thread diameter as per ISO 2853 annex A

VCO

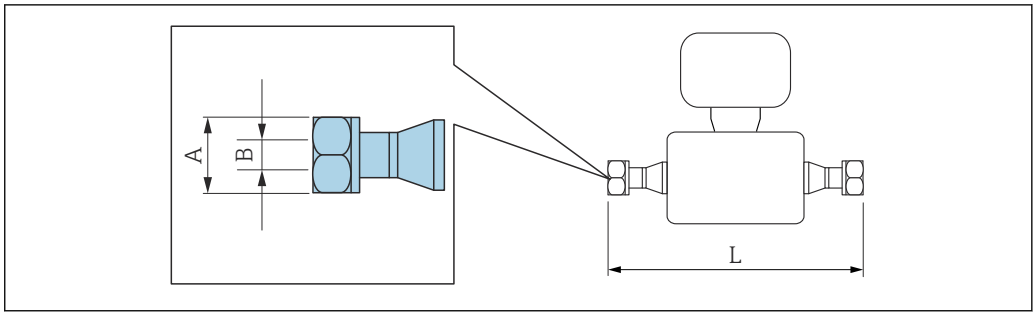

A0015624

Length tolerance for dimension L in mm:
+1.5 / −2.0

8-VCO-4 (½") 1.4404 (316/316L) *Order code for "Process connection", option* **CVS**			
DN [mm]	**A [in]**	**B [mm]**	**L [mm]**
8	AF 1	10.2	390

12-VCO-4 (¾") 1.4404 (316/316L) *Order code for "Process connection", option* **CWS**			
DN [mm]	**A [in]**	**B [mm]**	**L [mm]**
15	AF 1½	15.7	430

Accessories

Purge connections/pressure vessel monitoring/rupture disk

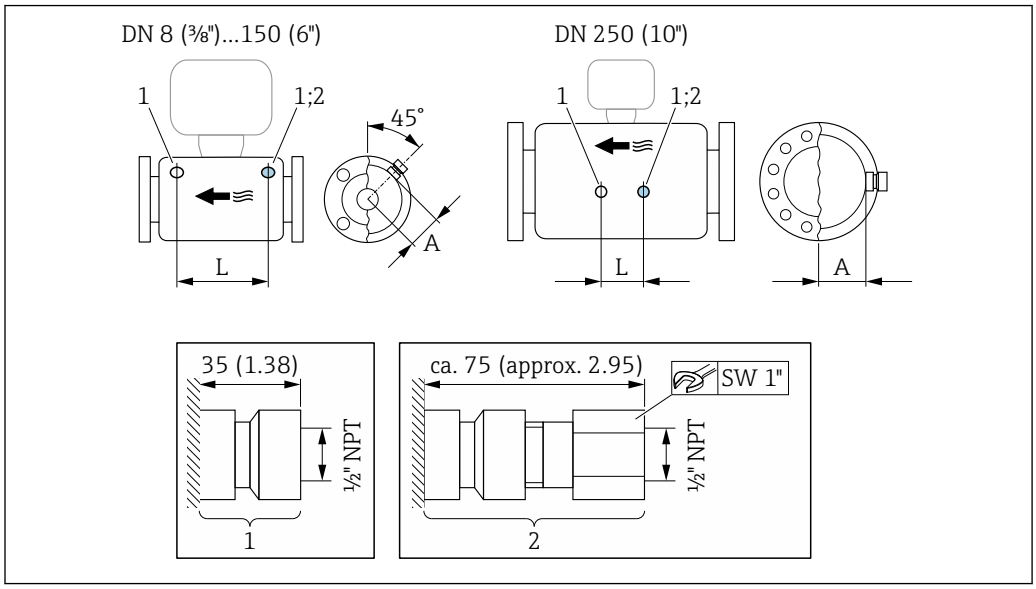

23

1 *Connection nipple for purge connections/pressure vessel monitoring: order code for "Sensor options", option CH "Purge connection"*
2 *Connection nipple with rupture disk: order code for "Sensor option", option CA "Rupture disk"*

DN	A	L
[mm]	[mm]	[mm]
8	62	216
15	62	220
25	62	260
40	67	310
50	79	452
80	101	560

Dimensions in US units

Compact version

Compact version

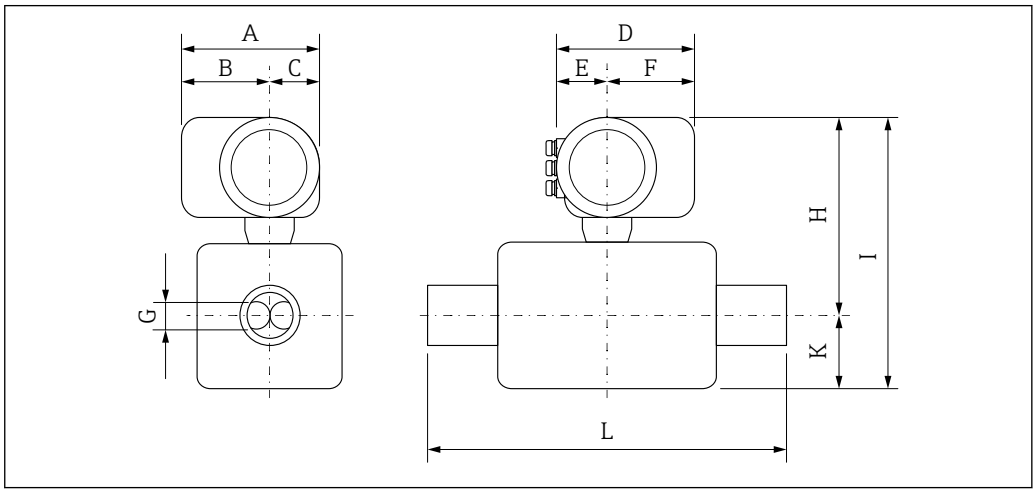

A0029786

Dimensions for version without overvoltage protection

Order code for "Housing", options B "GT18 dual compartment, 316L", C "GT20 dual compartment aluminum coated"

DN [in]	A [1] [in]	B [1] [in]	C [in]	D [2] [in]	E [in]	F [2] [in]	G [in]	H [3] [in]	I [3] [in]	K [in]	L [in]
⅜	6.38	4.02	2.36	6.50	2.95	3.54	0.21	10.55	13.5	2.95	[4]
½	6.38	4.02	2.36	6.50	2.95	3.54	0.33	10.55	13.5	2.95	[4]
1	6.38	4.02	2.36	6.50	2.95	3.54	0.47	10.55	13.5	2.95	[4]
1½	6.38	4.02	2.36	6.50	2.95	3.54	0.69	10.75	14.88	4.13	[4]
2	6.38	4.02	2.36	6.50	2.95	3.54	1.02	11.14	16.69	5.55	[4]
3	6.38	4.02	2.36	6.50	2.95	3.54	1.59	11.89	19.76	7.87	[4]

1) For version without local display: values - 0.28 in
2) For versions with overvoltage protection (OVP): values + 0.31 in
3) For version without local display: values - 0.11 in
4) Dependent on the respective process connection

Flange connections

Fixed flange ASME B16.5

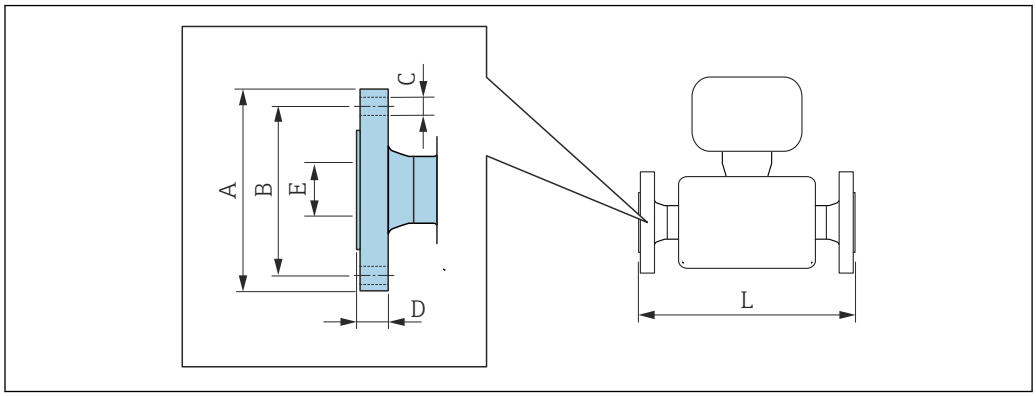

A0015621

Length tolerance for dimension L in inch:
+0.06 / −0.08

Flange according to ASME B16.5: Class 150 **1.4404 (F316/F316L)***: order code for "Process connection",* **option AAS** **Alloy C22***: order code for "Process connection", option* **AAC**						
DN [in]	**A [in]**	**B [in]**	**C [in]**	**D [in]**	**E [in]**	**L [in]**
⅜ 1)	3.54	2.37	4 × Ø0.62	0.44	0.62	14.57
½	3.54	2.37	4 × Ø0.62	0.44	0.62	15.91
1	4.33	3.13	4 × Ø0.62	0.56	1.05	17.32
1½	4.92	3.87	4 × Ø0.63	0.63	1.61	21.65
2	5.91	4.75	4 × Ø0.75	0.75	2.07	28.15
3	7.48	6.00	4 × Ø0.75	0.94	3.07	33.07
Surface roughness (flange): Ra 126 to 248 µin						

1) DN ⅜" with DN ½" flanges as standard

Flange according to ASME B16.5: Class 150 with reduction in nominal diameter **1.4404 (F316/F316L)**								
DN [in]	**reduction to DN [in]**	**Order code for "Process connection", option**	**A [in]**	**B [in]**	**C [in]**	**D [in]**	**E [in]**	**L [in]**
2	1½	AHS	5.91	4.75	4 × Ø0.75	0.75	2.07	21.65
3	2	AJS	7.48	6	4 × Ø0.75	0.94	3.07	28.35
4	3	ALS	9.06	7.5	8 × Ø0.75	0.94	4.03	34.41
Surface roughness (flange): Ra 126 to 248 µin								

Flange according to ASME B16.5: Class 300 **1.4404 (F316/F316L)***: order code for "Process connection", option* **ABS** **Alloy C22***: order code for "Process connection", option* **ABC**						
DN [in]	**A [in]**	**B [in]**	**C [in]**	**D [in]**	**E [in]**	**L [in]**
⅜ 1)	3.74	2.63	4 × Ø0.62	0.56	0.62	14.57
½	3.74	2.63	4 × Ø0.62	0.56	0.62	15.91

Flange according to ASME B16.5: Class 300 **1.4404 (F316/F316L)***: order code for "Process connection", option* **ABS** **Alloy C22***: order code for "Process connection", option* **ABC**						
DN [in]	**A [in]**	**B [in]**	**C [in]**	**D [in]**	**E [in]**	**L [in]**
1	4.92	3.50	4 × Ø0.75	0.69	1.05	17.32
1½	6.10	4.50	4 × Ø0.88	0.81	1.61	21.65
2	6.50	5.00	8 × Ø0.75	0.88	2.07	28.15
3	8.27	6.63	8 × Ø0.88	1.12	3.07	33.07
Surface roughness (flange): Ra 126 to 248 µin						

1) DN ⅜" with DN ½" flanges as standard

Flange according to ASME B16.5: Class 300 with reduction in nominal diameter **1.4404 (F316/F316L)**								
DN [in]	**reduction to DN [in]**	**Order code for "Process connection", option**	**A [in]**	**B [in]**	**C [in]**	**D [in]**	**E [in]**	**L [in]**
2	1½	AIS	6.5	5	8 × Ø0.75	0.88	2.07	24.21
3	2	AKS	8.27	6.63	8 × Ø0.88	1.12	3.07	28.82
4	3	AMS	10.04	7.87	8 × Ø0.88	1.25	4.03	35.2
Surface roughness (flange): Ra 126 to 248 µin								

Flange according to ASME B16.5: Class 600 **1.4404 (F316/F316L)***: order code for "Process connection", option* **ACS** **Alloy C22***: order code for "Process connection", option* **ACC**						
DN [in]	**A [in]**	**B [in]**	**C [in]**	**D [in]**	**E [in]**	**L [in]**
⅜ [1)]	3.74	2.63	4 × Ø0.62	0.81	0.55	15.75
½	3.74	2.63	4 × Ø0.62	0.81	0.55	16.54
1	4.92	3.50	4 × Ø0.75	0.94	0.96	19.29
1½	6.10	4.50	4 × Ø0.88	1.13	1.5	23.62
2	6.50	5.00	8 × Ø0.75	1.25	1.94	29.21
3	8.27	6.63	8 × Ø0.88	1.5	2.9	35.43
Surface roughness (flange): Ra 126 to 248 µin						

1) DN ⅜" with DN ½" flanges as standard

Lap joint flange ASME B16.5

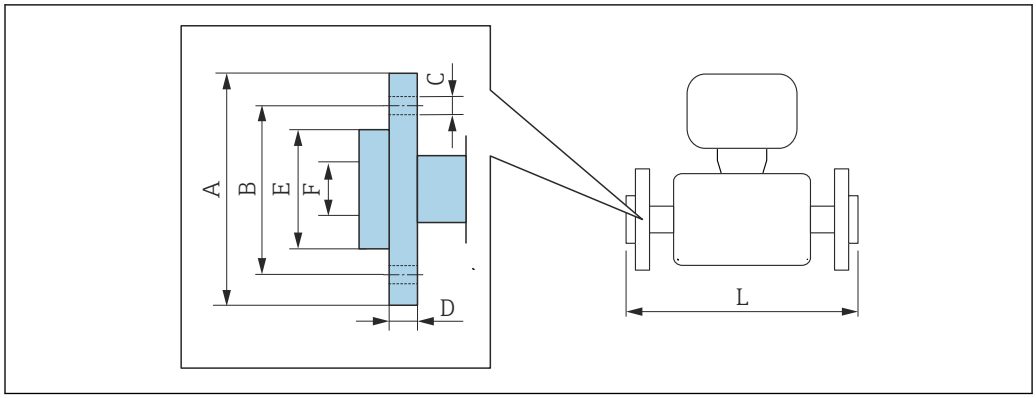

A0022221

Length tolerance for dimension L in inch:
+0.06 / −0.08

Lap joint flange according to ASME B16.5: Class 150 **1.4301 (F304)**, *wetted parts Alloy C22* *Order code for "Process connection", option* **ADC**								
DN [in]	**A [in]**	**B [in]**	**C [in]**	**D [in]**	**E [in]**	**F [in]**	**L [in]**	**L_{diff} 1) [in]**
⅜ 2)	3.54	2.37	4 × Ø 0.62	0.59	1.38	0.62	14.57	0
½	3.54	2.37	4 × Ø 0.62	0.59	1.38	0.62	15.91	0
1	4.33	3.13	4 × Ø 0.62	0.63	2	1.05	17.32	0
1½	4.92	3.87	4 × Ø 0.62	0.63	2.88	1.61	21.65	0
2	5.91	4.75	4 × Ø 0.75	0.75	3.62	2.07	28.15	0
3	7.48	6.00	4 × Ø 0.75	0.88	5	3.07	33.07	0
Surface roughness (flange): Ra 126 to 492 µin								

1) Difference to installation length of the welding neck flange (order code for "Process connection", option AAC)
2) DN ⅜" with DN ½" flanges as standard

Lap joint flange according to ASME B16.5: Class 300 **1.4301 (F304)**, *wetted parts Alloy C22* *Order code for "Process connection", option* **AEC**								
DN [in]	**A [in]**	**B [in]**	**C [in]**	**D [in]**	**E [in]**	**F [in]**	**L [in]**	**L_{diff} 1) [in]**
⅜ 2)	3.74	2.63	4 × Ø 0.62	0.65	1.38	0.62	14.8	+0.23
½	3.74	2.63	4 × Ø 0.62	0.65	1.38	0.62	15.98	+0.07
1	4.92	3.50	4 × Ø 0.75	0.83	2	1.05	17.72	+0.40
1½	6.10	4.50	4 × Ø 0.88	0.91	2.88	1.61	22.2	+0.55
2	6.50	5.00	8 × Ø 0.75	1	3.62	2.07	28.23	+0.08
3	8.27	6.63	8 × Ø 0.88	1.22	5	3.07	33.57	+0.50
Surface roughness (flange): Ra 126 to 492 µin								

1) Difference to installation length of the welding neck flange (order code for "Process connection", option AAC)
2) DN ⅜" with DN ½" flanges as standard

Lap joint flange according to ASME B16.5, Class 600 **1.4301 (F304)**, *wetted parts Alloy C22* *Order code for "Process connection", option* **AFC**								
DN [in]	**A [in]**	**B [in]**	**C [in]**	**D [in]**	**E [in]**	**F [in]**	**L [in]**	**L_{diff} [1] [in]**
⅜ [2]	3.74	2.63	4 × Ø 0.62	0.67	1.38	0.55	15.75	0
½	3.74	2.63	4 × Ø 0.62	0.67	1.38	0.55	16.54	0
1	4.92	3.50	4 × Ø 0.75	0.85	2	0.96	19.29	0
1½	6.10	4.50	4 × Ø 0.88	0.98	2.88	1.5	23.62	0
2	6.50	5.00	8 × Ø 0.75	1.1	3.62	1.94	29.21	0
3	8.27	6.63	8 × Ø 0.88	1.38	5	2.9	35.43	0
Surface roughness (flange): Ra 126 to 492 µin								

1) Difference to installation length of the welding neck flange (order code for "Process connection", option AAC)
2) DN ⅜" with DN ½" flanges as standard

Clamp connections

Tri-Clamp

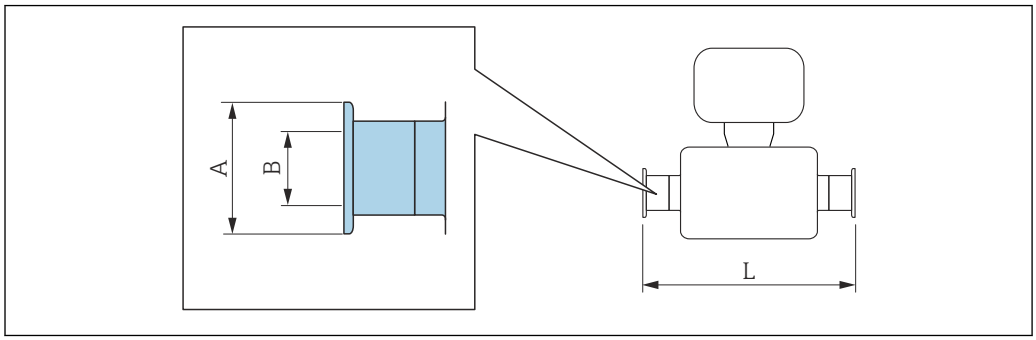

A0015625

Length tolerance for dimension L in inch:
+0.06 / −0.08

Tri-Clamp (½"), DIN 11866 series C **1.4404 (316/316L)** *Order code for "Process connection", option* **FDW**				
DN [in]	**Clamp [in]**	**A [in]**	**B [in]**	**L [in]**
⅜	½	0.98	0.37	14.4
½	½	0.98	0.37	15.7
3-A version available: order code for "Additional approval", option LP in conjunction with Ra_{max} = 30 µin: order code for "Measuring tube material", option SB, SE or Ra_{max} = 15 µin: order code for "Measuring tube material", option SC, SF Ra_{max} = 15 µin electropolished: order code for "Measuring tube material", option BC				

Tri-Clamp (≥ 1"), DIN 11866 series C **1.4404 (316/316L)** *Order code for "Process connection", option* **FTS**				
DN [in]	**Clamp [in]**	**A [in]**	**B [in]**	**L [in]**
⅜	1	1.98	0.87	14.4
½	1	1.98	0.87	15.7
1	1	1.98	0.87	17.1
1½	1½	1.98	1.37	22.0
2	2	2.52	1.87	28.3
3	3	3.58	2.87	35.4
3-A version available: order code for "Additional approval", option LP in conjunction with Ra_{max} = 30 µin: order code for "Measuring tube material", option SB, SE or Ra_{max} = 15 µin: order code for "Measuring tube material", option SC, SF Ra_{max} = 15 µin electropolished: order code for "Measuring tube material", option BC				

Threaded couplings

Thread SMS 1145

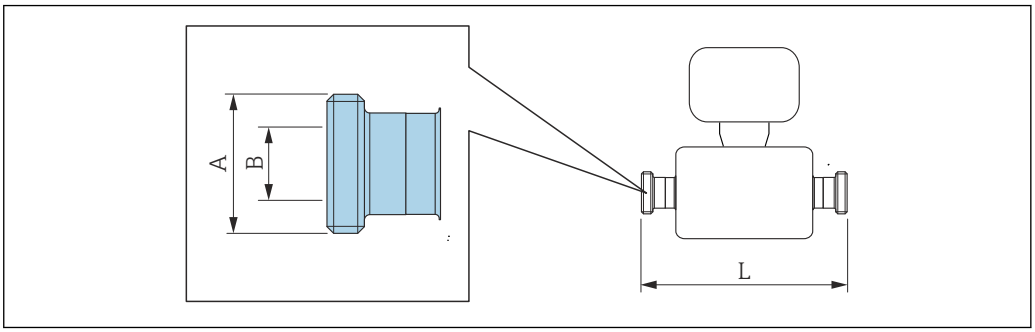

A0015628

Length tolerance for dimension L in inch:
+0.06 / −0.08

Thread SMS 1145 **1.4404 (316/316L)** *Order code for "Process connection", option* **SCS**			
DN **[in]**	**A** **[in]**	**B** **[in]**	**L** **[in]**
⅜	Rd 40 × ⅙	0.89	14.45
½	Rd 40 × ⅙	0.89	15.67
1	Rd 40 × ⅙	0.89	17.09
1½	Rd 60 × ⅙	1.4	22.05
2	Rd 70 × ⅙	1.91	28.35
3	Rd 98 × ⅙	2.87	35.43
3-A version available: order code for "Additional approval", option LP in conjunction with Ra_{max} = 30 µin: order code for "Measuring tube material", option SB, SE			

VCO

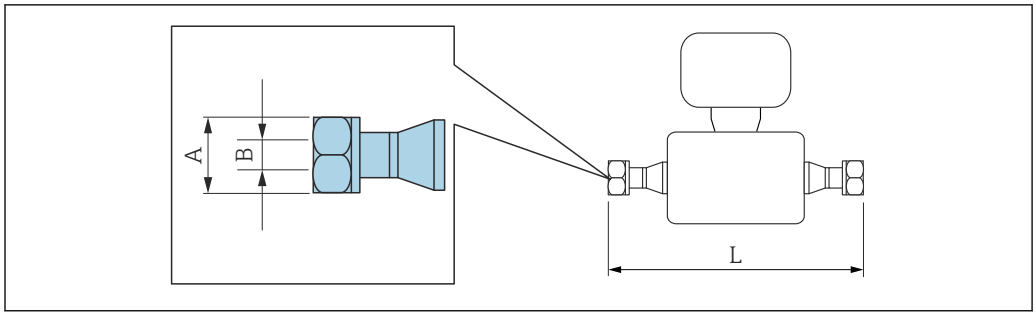

A0015624

Length tolerance for dimension L in inch:
+0.06 / −0.08

8-VCO-4 (½") **1.4404 (316/316L)** *Order code for "Process connection", option* **CVS**			
DN **[in]**	**A** **[in]**	**B** **[in]**	**L** **[in]**
⅜	AF 1	0.4	15.35

12-VCO-4 (¾") **1.4404 (316/316L)** *Order code for "Process connection", option* **CWS**			
DN **[in]**	**A** **[in]**	**B** **[in]**	**L** **[in]**
½	AF 1½	0.62	16.93

Accessories

Purge connections / secondary containment monitoring

Order code for "Sensor options", option CH

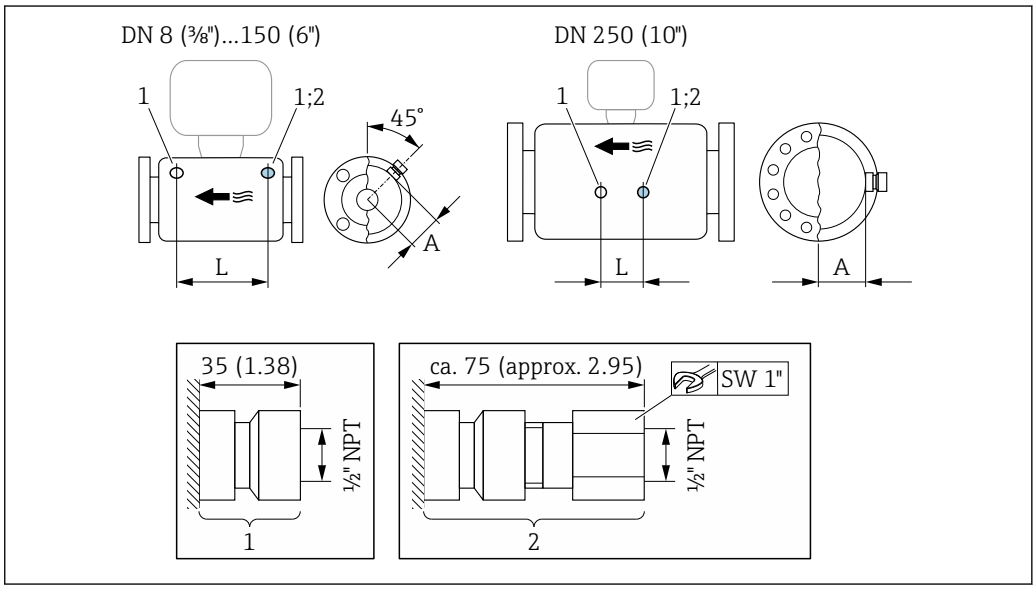

DN	G	H	L
[in]	[in]	[in]	[in]
⅜	½ NPT	2.44	8.50
½	½ NPT	2.44	8.66
1	½ NPT	2.44	10.24
1½	½ NPT	2.64	12.20
2	½ NPT	3.11	17.78
3	½ NPT	3.98	22.0

Weight

All values (weight) refer to devices with EN/DIN PN 40 flanges.

Weight in SI units

DN [mm]	Weight [kg]	
	Order code for "Housing", option C Aluminum coated	Order code for "Housing", option B 1.4404 (316L)
8	9	11.5
15	10	12.5
25	12	14.5
40	17	19.5
50	28	30.5
80	53	55.5

Weight in US units

DN [in]	Weight [lbs]	
	Order code for "Housing", option C Aluminum coated	Order code for "Housing", option B 1.4404 (316L)
3/8	20	25
½	22	28
1	26	32
1½	37	43
2	62	67
3	117	122

Materials

Transmitter housing

- Order code for "Housing", option **B**: stainless steel CF-3M (316L, 1.4404)
- Order code for "Housing", option **C** "Compact, aluminum coated": Aluminum, AlSi10Mg, coated
- Window material: glass

Cable entries/cable glands

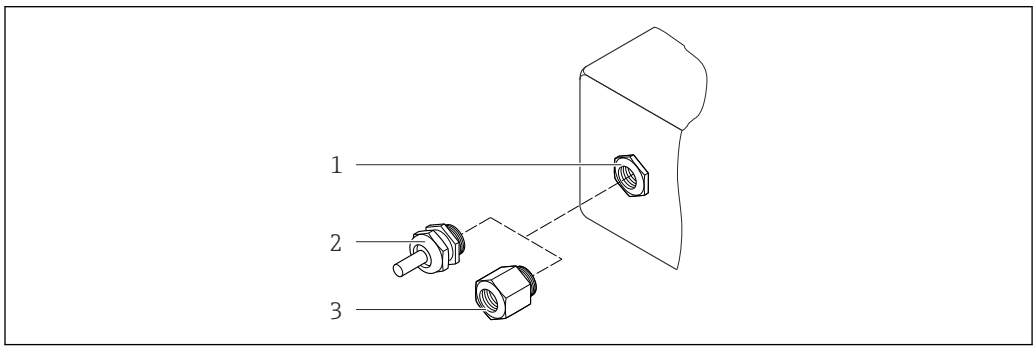

24 Possible cable entries/cable glands

1 Cable entry with M20 × 1.5 internal thread
2 Cable gland M20 × 1.5
3 Adapter for cable entry with internal thread G ½" or NPT ½"

Order code for "Housing", option B "GT18 two-chamber, 316L"

Cable entry/cable gland	Type of protection	Material
Cable gland M20 × 1.5	▪ Non-Ex ▪ Ex ia ▪ Ex ic ▪ Ex nA ▪ Ex tb	Stainless steel ,1.4404
Adapter for cable entry with internal thread G ½"	For non-Ex and Ex (except for CSA Ex d/XP)	Stainless steel, 1.4404 (316L)
Adapter for cable entry with internal thread NPT ½"	For non-Ex and Ex	

Order code for "Housing", option C "GT20 dual compartment, aluminum coated"

Cable entry/cable gland	Type of protection	Material
Cable gland M20 × 1.5	▪ Non-Ex ▪ Ex ia ▪ Ex ic	Plastic
	Adapter for cable entry with internal thread G ½"	Nickel-plated brass
Adapter for cable entry with internal thread NPT ½"	For non-Ex and Ex (except for CSA Ex d/XP)	Nickel-plated brass
Thread NPT ½" via adapter	For non-Ex and Ex	

Device plug

Electrical connection	Material
Plug M12x1	▪ Socket: stainless steel, 1.4401/316 ▪ Contact housing: plastic, PUR, black ▪ Contacts: metal, CuZn, gold-plated ▪ Threaded connection seal: NBR

Sensor housing

- Acid and alkali-resistant outer surface
- stainless steel, 1.4301 (304)
  Optional: order code for "Sensor option", option **CC**: stainless steel, 1.4404 (316L)

Measuring tubes

- DN 8 to 80 (3/8 to 3"): stainless steel, 1.4539 (904L);
  Manifold: stainless steel, 1.4404 (316/316L)
- DN 8 to 80 (3/8 to 3"): Alloy C22, 2.4602 (UNS N06022);
  Manifold: Alloy C22, 2.4602 (UNS N06022)

Process connections

- Flanges according to EN 1092-1 (DIN2501) / according to ASME B 16.5 / as per JIS B2220:
  - Stainless steel, 1.4404 (F316/F316L)
  - Alloy C22, 2.4602 (UNS N06022)
  - Lap joint flanges: stainless steel, 1.4301 (F304); wetted parts Alloy C22
- All other process connections:
  Stainless steel, 1.4404 (316/316L)

List of all available process connections → 📄 70

Seals

Welded process connections without internal seals

Accessories

Protective cover

Stainless steel, 1.4404 (316L)

Process connections

- Fixed flange connections:
  - EN 1092-1 (DIN 2501) flange
  - EN 1092-1 (DIN 2512N) flange
  - Namur lengths in accordance with NE 132
  - ASME B16.5 flange
  - JIS B2220 flange
  - DIN 11864-2 Form A flange, DIN11866 series A, flange with notch
- Clamp connections
  Tri-Clamp (OD tubes), DIN 11866 series C
- Threads:
  - DIN 11851 thread, DIN11866 series A
  - SMS 1145 thread
  - ISO 2853 thread, ISO2037
  - DIN 11864-1 Form A thread, DIN11866 series A
- VCO connections
  - 8-VCO-4
  - 12-VCO-4

For information on the different materials used in the process connections → 68

Surface roughness

All data relate to parts in contact with fluid. The following surface roughness quality can be ordered.
- Not polished
- Ra_{max} = 0.76 µm (30 µin)
- Ra_{max} = 0.38 µm (15 µin)
- Ra_{max} = 0.38 µm (15 µin) electropolished

Operability

Operating concept

Operator-oriented menu structure for user-specific tasks
- Commissioning
- Operation
- Diagnostics
- Expert level

Quick and safe commissioning
- Guided menus ("Make-it-run" wizards) for applications
- Menu guidance with brief explanations of the individual parameter functions

Reliable operation
- Operation in the following languages:
  - Via local display:
    English, German, French, Spanish, Italian, Dutch, Portuguese, Polish, Russian, Swedish, Turkish, Chinese, Japanese, Bahasa (Indonesian), Vietnamese, Czech
  - Via "FieldCare" operating tool:
    English, German, French, Spanish, Italian, Chinese, Japanese
- Uniform operating philosophy applied to device and operating tools
- If replacing the electronic module, transfer the device configuration via the integrated memory (integrated HistoROM) which contains the process and measuring device data and the event logbook. No need to reconfigure.

Efficient diagnostics increase measurement availability
- Troubleshooting measures can be called up via the device and in the operating tools
- Diverse simulation options, logbook for events that occur and optional line recorder functions

Languages

Can be operated in the following languages:
- Via local display:
  English, German, French, Spanish, Italian, Dutch, Portuguese, Polish, Russian, Swedish, Turkish, Chinese, Japanese, Bahasa (Indonesian), Vietnamese, Czech
- Via "FieldCare" operating tool:
  English, German, French, Spanish, Italian, Chinese, Japanese

Local operation

Via display module

Two display modules are available:

Order code for "Display; Operation", option **C** "SD02"	Order code for "Display; Operation", option **E** "SD03"
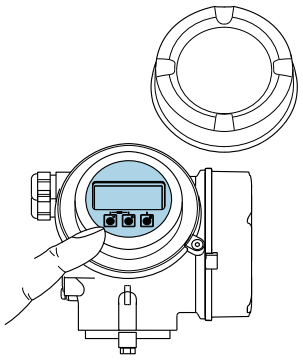 A0032219	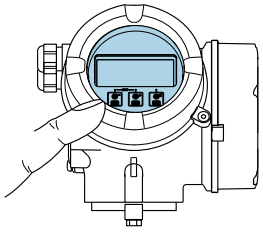 A0032221
1 Operation with pushbuttons	*1 Operation with touch control*

Display elements

- 4-line, illuminated, graphic display
- White background lighting; switches to red in event of device errors
- Format for displaying measured variables and status variables can be individually configured
- Permitted ambient temperature for the display: −20 to +60 °C (−4 to +140 °F)
  The readability of the display may be impaired at temperatures outside the temperature range.

Operating elements

- Operation with 3 push buttons with open housing: ⊞, ⊟, Ⓔ
  or
- External operation via touch control (3 optical keys) without opening the housing: ⊞, ⊟, Ⓔ
- Operating elements also accessible in various hazardous areas

Additional functionality

- Data backup function
  The device configuration can be saved in the display module.
- Data comparison function
  The device configuration saved in the display module can be compared to the current device configuration.
- Data transfer function
  The transmitter configuration can be transmitted to another device using the display module.

Via remote display and operating module FHX50

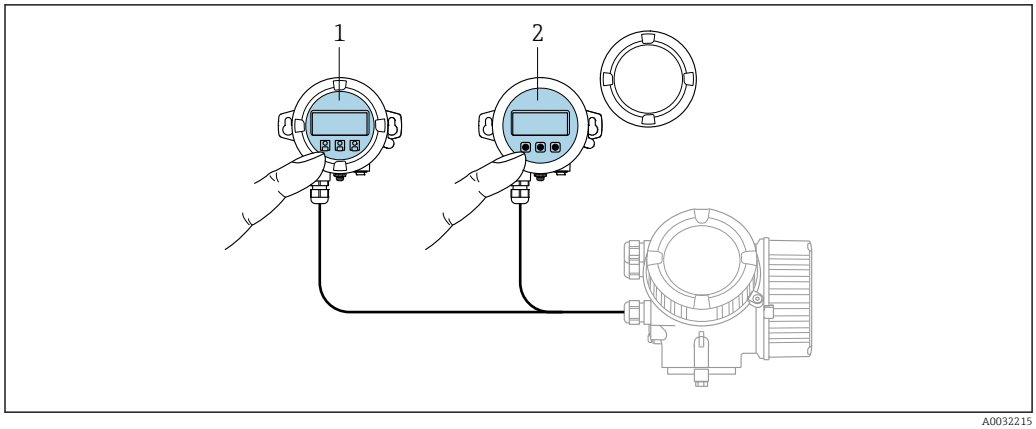

A0032215

25 FHX50 operating options

1 SD02 display and operating module, push buttons: cover must be opened for operation
2 SD03 display and operating module, optical buttons: operation possible through cover glass

Remote operation

Via HART protocol

This communication interface is available in device versions with a HART output.

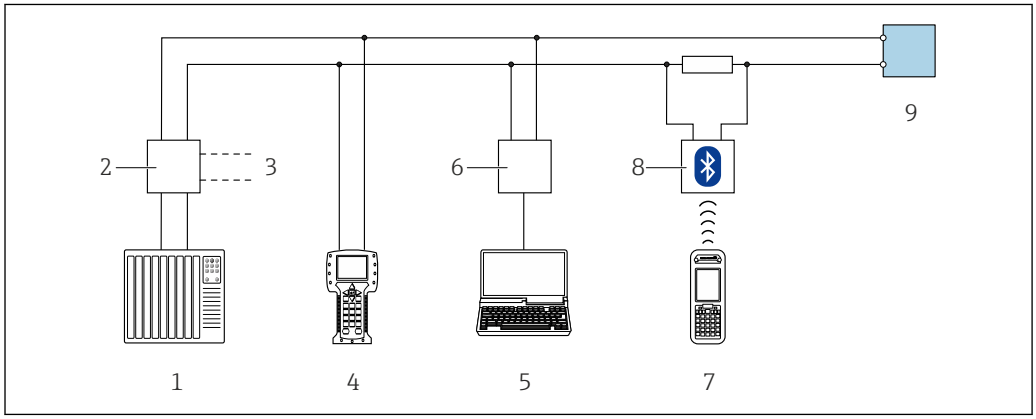

A0028746

26 Options for remote operation via HART protocol (passive)

1 Control system (e.g. PLC)
2 Transmitter power supply unit, e.g. RN221N (with communication resistor)
3 Connection for Commubox FXA195 and Field Communicator 475
4 Field Communicator 475
5 Computer with Web browser (e.g. Internet Explorer) for accessing the integrated device Web server or computer with operating tool (e.g. FieldCare, DeviceCare, AMS Device Manager, SIMATIC PDM) with COM DTM "CDI Communication TCP/IP"
6 Commubox FXA195 (USB)
7 Field Xpert SFX350 or SFX370
8 VIATOR Bluetooth modem with connecting cable
9 Transmitter

Via PROFIBUS PA network

This communication interface is available in device versions with PROFIBUS PA.

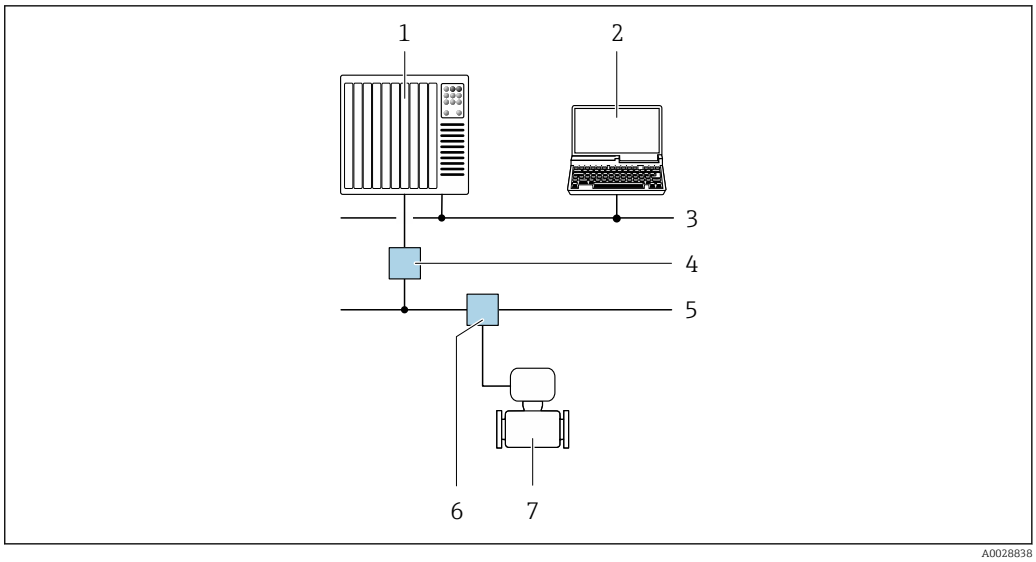

27 *Options for remote operation via PROFIBUS PA network*

1 *Automation system*
2 *Computer with PROFIBUS network card*
3 *PROFIBUS DP network*
4 *Segment coupler PROFIBUS DP/PA*
5 *PROFIBUS PA network*
6 *T-box*
7 *Measuring device*

Via FOUNDATION Fieldbus network

This communication interface is available in device versions with FOUNDATION Fieldbus.

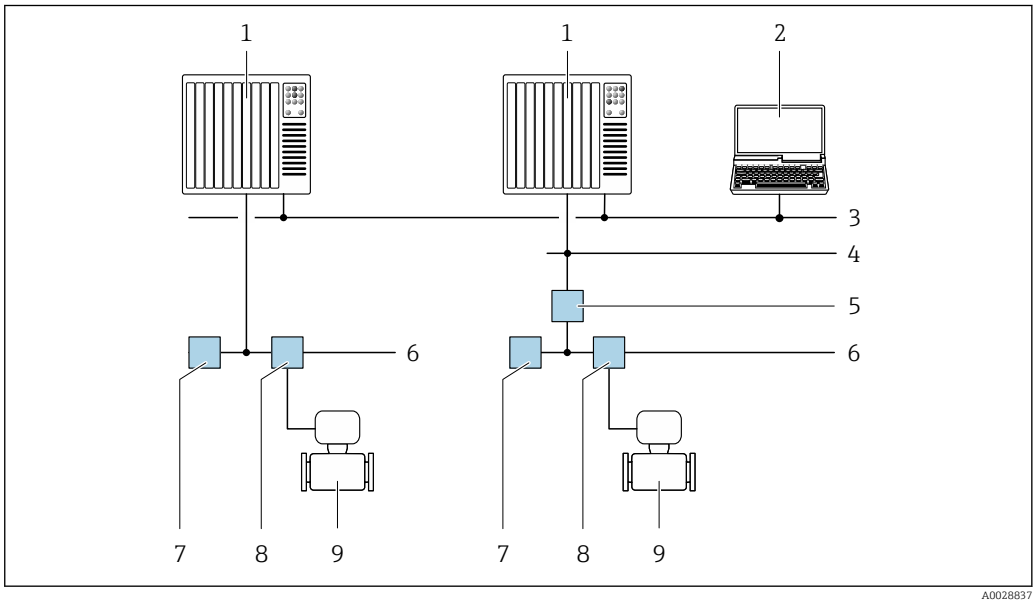

28 *Options for remote operation via FOUNDATION Fieldbus network*

1 *Automation system*
2 *Computer with FOUNDATION Fieldbus network card*
3 *Industry network*
4 *High Speed Ethernet FF-HSE network*
5 *Segment coupler FF-HSE/FF-H1*
6 *FOUNDATION Fieldbus FF-H1 network*
7 *Power supply FF-H1 network*
8 *T-box*
9 *Measuring device*

Service interface

Via service interface (CDI)

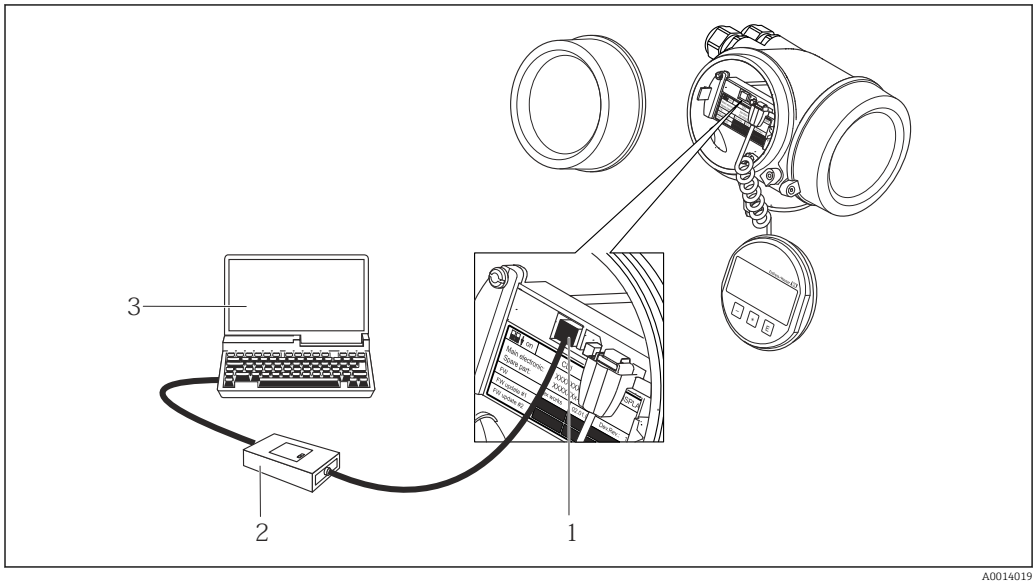

1 Service interface (CDI = Endress+Hauser Common Data Interface) of the measuring device
2 Commubox FXA291
3 Computer with "FieldCare" operating tool with COM DTM "CDI Communication FXA291"

Certificates and approvals

CE mark

The measuring system is in conformity with the statutory requirements of the applicable EU Directives. These are listed in the corresponding EU Declaration of Conformity along with the standards applied.

Endress+Hauser confirms successful testing of the device by affixing to it the CE mark.

C-Tick symbol

The measuring system meets the EMC requirements of the "Australian Communications and Media Authority (ACMA)".

Functional safety

The measuring device can be used for flow monitoring systems (min., max., range) up to SIL 2 (single-channel architecture; order code for "Additional approval", option **LA**) and SIL 3 (multichannel architecture with homogeneous redundancy) and is independently evaluated and certified by the TÜV in accordance with IEC 61508.

The following types of monitoring in safety equipment are possible:
- Mass flow
- Volume flow
- Density

Functional Safety Manual with information on the SIL device → 📄 81

Ex approval

The measuring device is certified for use in hazardous areas and the relevant safety instructions are provided in the separate "Safety Instructions" (XA) document. Reference is made to this document on the nameplate.

The separate Ex documentation (XA) containing all the relevant explosion protection data is available from your Endress+Hauser sales center.

ATEX/IECEx

Currently, the following versions for use in hazardous areas are available:

Ex d

Category (ATEX)	Type of protection
II2G	Ex d[ia] IIC T6...T1 Gb or Ex d[ia] IIB T6...T1 Gb [1)]
II1/2G	Ex d[ia] IIC T6...T1 Ga/Gb or Ex d[ia] IIB T6...T1 Ga/Gb [1)]
II1/2G, II2D	Ex d[ia] IIC T6...T1 Ga/Gb or Ex d[ia] IIB T6...T1 Ga/Gb [1)] Ex tb IIIC Txx °C Db

1) For sensors with nominal diameter DN 80

Ex ia

Category (ATEX)	Type of protection
II2G	Ex ia IIC T6...T1 Gb or Ex ia IIB T6...T1 Gb [1)]
II1/2G	Ex ia IIC T6...T1 Ga/Gb or Ex ia IIB T6...T1 Ga/Gb [1)]
II1/2G, II2D	Ex ia IIC T6...T1 Ga/Gb or Ex ia IIB T6...T1 Ga/Gb [1)] Ex tb IIIC Txx °C Db

1) For sensors with nominal diameter DN 80

Ex nA

Category (ATEX)	Type of protection
II3G	Ex nA IIC T6...T1 Gc

Ex ic

Category (ATEX)	Type of protection
II3G	Ex ic IIC T6...T1 Gc or Ex ic IIB T6...T1 Gc [1)]
II1/3G	Ex ic[ia] IIC T6...T1 Ga/Gc or Ex ic[ia] IIB T6...T1 Ga/Gc [1)]

1) For sensors with nominal diameter DN 80

$_{c}$CSA$_{US}$

Currently, the following versions for use in hazardous areas are available:

IS (Ex i) and XP (Ex d)
Class I, II, III Division 1 Groups ABCDEFG
For sensors with nominal diameter DN 80: Class I, II, III Division 1 Groups CDEFG

NI (Ex nA, Ex nL)
- Class I Division 2 Groups ABCD
- Class II, III Division 1 Groups EFG

Sanitary compatibility

- 3-A approval
- EHEDG-tested

Functional safety

The measuring device can be used for flow monitoring systems (min., max., range) up to SIL 2 (single-channel architecture; order code for "Additional approval", option **LA**) and SIL 3 (multichannel architecture with homogeneous redundancy) and is independently evaluated and certified by the TÜV in accordance with IEC 61508.

The following types of monitoring in safety equipment are possible:
- Mass flow
- Volume flow
- Density

Functional Safety Manual with information on the SIL device → 81

HART certification

HART interface

The measuring device is certified and registered by the FieldComm Group. The measuring system meets all the requirements of the following specifications:
- Certified according to HART 7
- The device can also be operated with certified devices of other manufacturers (interoperability)

FOUNDATION Fieldbus certification

FOUNDATION Fieldbus interface

The measuring device is certified and registered by the FieldComm Group. The measuring system meets all the requirements of the following specifications:
- Certified in accordance with FOUNDATION Fieldbus H1
- Interoperability Test Kit (ITK), revision version 6.1.1 (certificate available on request)
- Physical Layer Conformance Test
- The device can also be operated with certified devices of other manufacturers (interoperability)

Certification PROFIBUS

PROFIBUS interface

The measuring device is certified and registered by the PROFIBUS User Organization (PNO). The measuring system meets all the requirements of the following specifications:
- Certified in accordance with PROFIBUS PA Profile 3.02
- The device can also be operated with certified devices of other manufacturers (interoperability)

Pressure Equipment Directive

The devices can be ordered with or without a PED approval. If a device with a PED approval is required, this must be explicitly stated in the order. For devices with nominal diameters less than or equal to DN 25 (1"), this is neither possible nor necessary.

- With the identification PED/G1/x (x = category) on the sensor nameplate, Endress+Hauser confirms conformity with the "Essential Safety Requirements" specified in Appendix I of the Pressure Equipment Directive 2014/68/EC.
- Devices bearing this marking (PED) are suitable for the following types of medium:
  - Media in Group 1 and 2 with a vapor pressure greater than, or smaller and equal to0.5 bar (7.3 psi)
  - Unstable gases
- Devices not bearing this marking (PED) are designed and manufactured according to good engineering practice. They meet the requirements of Art. 4, Par. 3 of the Pressure Equipment Directive 2014/68/EU. The range of application is indicated in tables 6 to 9 in Annex II of the Pressure Equipment Directive 2014/68/EC.

Other standards and guidelines

- EN 60529
  Degrees of protection provided by enclosures (IP code)
- IEC/EN 60068-2-6
  Environmental influences: Test procedure - Test Fc: vibrate (sinusoidal).
- IEC/EN 60068-2-31
  Environmental influences: Test procedure - Test Ec: shocks due to rough handling, primarily for devices.
- EN 61010-1
  Safety requirements for electrical equipment for measurement, control and laboratory use - general requirements
- IEC/EN 61326
  Emission in accordance with Class A requirements. Electromagnetic compatibility (EMC requirements).
- IEC 61508
  Functional safety of electrical/electronic/programmable electronic safety-related systems
- NAMUR NE 21
  Electromagnetic compatibility (EMC) of industrial process and laboratory control equipment
- NAMUR NE 32
  Data retention in the event of a power failure in field and control instruments with microprocessors

- NAMUR NE 43
  Standardization of the signal level for the breakdown information of digital transmitters with analog output signal.
- NAMUR NE 53
  Software of field devices and signal-processing devices with digital electronics
- NAMUR NE 80
  The application of the pressure equipment directive to process control devices
- NAMUR NE 105
  Specifications for integrating fieldbus devices in engineering tools for field devices
- NAMUR NE 107
  Self-monitoring and diagnosis of field devices
- NAMUR NE 131
  Requirements for field devices for standard applications
- NAMUR NE 132
  Coriolis mass meter
- NACE MR0103
  Materials resistant to sulfide stress cracking in corrosive petroleum refining environments.
- NACE MR0175/ISO 15156-1
  Materials for use in H2S-containing Environments in Oil and Gas Production.

Ordering information

Detailed ordering information is available from the following sources:
- In the Product Configurator on the Endress+Hauser website: www.endress.com -> Click "Corporate" -> Select your country -> Click "Products" -> Select the product using the filters and search field -> Open product page -> The "Configure" button to the right of the product image opens the Product Configurator.
- From your Endress+Hauser Sales Center: www.addresses.endress.com

Product Configurator - the tool for individual product configuration
- Up-to-the-minute configuration data
- Depending on the device: Direct input of measuring point-specific information such as measuring range or operating language
- Automatic verification of exclusion criteria
- Automatic creation of the order code and its breakdown in PDF or Excel output format
- Ability to order directly in the Endress+Hauser Online Shop

Application packages

Many different application packages are available to enhance the functionality of the device. Such packages might be needed to address safety aspects or specific application requirements.

The application packages can be ordered with the device or subsequently from Endress+Hauser. Detailed information on the order code in question is available from your local Endress+Hauser sales center or on the product page of the Endress+Hauser website: www.endress.com.

Detailed information on the application packages:
Special Documentation for the device → 📄 81

Diagnostics functions

Package	Description
Extended HistoROM	Comprises extended functions concerning the event log and the activation of the measured value memory. Event log: Memory volume is extended from 20 message entries (standard version) to up to 100 entries. Data logging (line recorder): ▪ Memory capacity for up to 1000 measured values is activated. ▪ 250 measured values can be output via each of the 4 memory channels. The recording interval can be defined and configured by the user. ▪ Measured value logs can be accessed via the local display or operating tool e.g. FieldCare, DeviceCare or Web server.

Heartbeat Technology

Package	Description
Heartbeat Verification	**Heartbeat Verification** Meets the requirement for traceable verification to DIN ISO 9001:2008 Chapter 7.6 a) "Control of monitoring and measuring equipment". ▪ Functional testing in the installed state without interrupting the process. ▪ Traceable verification results on request, including a report. ▪ Simple testing process via local operation or other operating interfaces. ▪ Clear measuring point assessment (pass/fail) with high test coverage within the framework of manufacturer specifications. ▪ Extension of calibration intervals according to operator's risk assessment.

Accessories

Various accessories, which can be ordered with the device or subsequently from Endress+Hauser, are available for the device. Detailed information on the order code in question is available from your local Endress+Hauser sales center or on the product page of the Endress+Hauser website: www.endress.com.

Device-specific accessories

For the transmitter

Accessories	Description
Promass 200 transmitter	Transmitter for replacement or storage. Use the order code to define the following specifications: ▪ Approvals ▪ Output ▪ Display / operation ▪ Housing ▪ Software For details, see Installation Instructions EA00104D

Remote display FHX50	FHX50 housing for accommodating a display module .
	▪ FHX50 housing suitable for:
	  ▪ SD02 display module (push buttons)
	  ▪ SD03 display module (touch control)
	▪ Housing material:
	  ▪ Plastic PBT
	  ▪ Stainless steel CF-3M (316L, 1.4404)
	▪ Length of connecting cable: up to max. 60 m (196 ft) (cable lengths available for order: 5 m (16 ft), 10 m (32 ft), 20 m (65 ft), 30 m (98 ft))
	The measuring device can be ordered with the FHX50 housing and a display module. The following options must be selected in the separate order codes:
	▪ Order code for measuring device, feature 030: Option L or M "Prepared for FHX50 display"
	▪ Order code for FHX50 housing, feature 050 (device version): Option A "Prepared for FHX50 display"
	▪ Order code for FHX50 housing, depends on the desired display module in feature 020 (display, operation):
	  ▪ Option C: for an SD02 display module (push buttons)
	  ▪ Option E: for an SD03 display module (touch control)
	The FHX50 housing can also be ordered as a retrofit kit. The measuring device display module is used in the FHX50 housing. The following options must be selected in the order code for the FHX50 housing:
	▪ Feature 050 (measuring device version): option B "Not prepared for FHX50 display"
	▪ Feature 020 (display, operation): option A "None, existing displayed used"
	For details, see Special Documentation SD01007F
	(Order number: FHX50)

Overvoltage protection for 2-wire devices	Ideally, the overvoltage protection module should be ordered directly with the device. See product structure, characteristic 610 "Accessory mounted", option NA "Overvoltage protection". Separate order necessary only if retrofitting. ▪ OVP10: For 1-channel devices (characteristic 020, option A): ▪ OVP20: For 2-channel devices (characteristic 020, options B, C, E or G) For details, see Special Documentation SD01090F.
Protective cover	Is used to protect the measuring device from the effects of the weather: e.g. rainwater, excess heating from direct sunlight or extreme cold in winter. For details, see Special Documentation SD00333F

For the sensor

Accessories	Description
Heating jacket	Is used to stabilize the temperature of the fluids in the sensor. Water, water vapor and other non-corrosive liquids are permitted for use as fluids. If using oil as a heating medium, please consult with Endress+Hauser. Heating jackets cannot be used with sensors fitted with a rupture disk. For details, see Operating Instructions BA00132D

Communication-specific accessories

Accessories	Description
Commubox FXA195 HART	For intrinsically safe HART communication with FieldCare via the USB interface. For details, see "Technical Information" TI00404F
Commubox FXA291	Connects Endress+Hauser field devices with a CDI interface (= Endress+Hauser Common Data Interface) and the USB port of a computer or laptop. For details, see the "Technical Information" document TI405C/07
HART Loop Converter HMX50	Is used to evaluate and convert dynamic HART process variables to analog current signals or limit values. For details, see "Technical Information" TI00429F and Operating Instructions BA00371F
Wireless HART adapter SWA70	Is used for the wireless connection of field devices. The WirelessHART adapter can be easily integrated into field devices and existing infrastructures, offers data protection and transmission safety and can be operated in parallel with other wireless networks with minimum cabling complexity. For details, see Operating Instructions BA00061S
Fieldgate FXA320	Gateway for the remote monitoring of connected 4 to 20 mA measuring devices via a Web browser. For details, see "Technical Information" TI00025S and Operating Instructions BA00053S
Fieldgate FXA520	Gateway for the remote diagnostics and remote configuration of connected HART measuring devices via a Web browser. For details, see "Technical Information" TI00025S and Operating Instructions BA00051S
Field Xpert SFX350	Field Xpert SFX350 is a mobile computer for commissioning and maintenance. It enables efficient device configuration and diagnostics for HART and FOUNDATION Fieldbus devices in the **non-Ex area**. For details, see Operating Instructions BA01202S
Field Xpert SFX370	Field Xpert SFX370 is a mobile computer for commissioning and maintenance. It enables efficient device configuration and diagnostics for HART and FOUNDATION Fieldbus devices in the **non-Ex area** and the **Ex area**. For details, see Operating Instructions BA01202S

Service-specific accessories

Accessories	Description
Applicator	Software for selecting and sizing Endress+Hauser measuring devices: ▪ Choice of measuring devices for industrial requirements ▪ Calculation of all the necessary data for identifying the optimum flowmeter: e.g. nominal diameter, pressure loss, flow velocity and accuracy. ▪ Graphic illustration of the calculation results ▪ Determination of the partial order code, administration, documentation and access to all project-related data and parameters over the entire life cycle of a project. Applicator is available: ▪ Via the Internet: https://wapps.endress.com/applicator ▪ As a downloadable DVD for local PC installation.
W@M	W@M Life Cycle Management Improved productivity with information at your fingertips. Data relevant to a plant and its components is generated from the first stages of planning and during the asset's complete life cycle. W@M Life Cycle Management is an open and flexible information platform with online and on-site tools. Instant access for your staff to current, in-depth data shortens your plant's engineering time, speeds up procurement processes and increases plant uptime. Combined with the right services, W@M Life Cycle Management boosts productivity in every phase. For more information, visit www.endress.com/lifecyclemanagement
FieldCare	FDT-based plant asset management tool from Endress+Hauser. It can configure all smart field units in your system and helps you manage them. By using the status information, it is also a simple but effective way of checking their status and condition. For details, see Operating Instructions BA00027S and BA00059S
DeviceCare	Tool for connecting and configuring Endress+Hauser field devices. For details, see Innovation brochure IN01047S

System components

Accessories	Description
Memograph M graphic display recorder	The Memograph M graphic display recorder provides information on all relevant measured variables. Measured values are recorded correctly, limit values are monitored and measuring points analyzed. The data are stored in the 256 MB internal memory and also on a SD card or USB stick. For details, see "Technical Information" TI00133R and Operating Instructions BA00247R
RN221N	Active barrier with power supply for safe separation of 4-20 mA standard signal circuits. Offers bidirectional HART transmission. For details, see "Technical Information" TI00073R and Operating Instructions BA00202R
RNS221	Supply unit for powering two 2-wire measuring devices solely in the non-Ex area. Bidirectional communication is possible via the HART communication jacks. For details, see "Technical Information" TI00081R and Brief Operating Instructions KA00110R
Cerabar M	The pressure transmitter for measuring the absolute and gauge pressure of gases, steam and liquids. It can be used to read in the operating pressure value. For details, see "Technical Information" TI00426P, TI00436P and Operating Instructions BA00200P, BA00382P
Cerabar S	The pressure transmitter for measuring the absolute and gauge pressure of gases, steam and liquids. It can be used to read in the operating pressure value. For details, see "Technical Information" TI00383P and Operating Instructions BA00271P

Documentation

For an overview of the scope of the associated Technical Documentation, refer to the following:
- The *W@M Device Viewer* : Enter the serial number from the nameplate (www.endress.com/deviceviewer)
- The *Endress+Hauser Operations App*: Enter the serial number from the nameplate or scan the 2-D matrix code (QR code) on the nameplate.

Standard documentation

Brief Operating Instructions

Part 1 of 2: Sensor

Measuring device	Documentation code
Proline Promass F	KA01260D

Part 2 of 2: Transmitter

Measuring device	Documentation code		
	HART	FOUNDATION Fieldbus	PROFIBUS PA
Proline Promass 200	KA012268	KA01267D	KA01269D

Operating Instructions

Measuring device	Documentation code		
	HART	FOUNDATION Fieldbus	PROFIBUS PA
Proline Promass F 200	BA01112D	BA01315D	BA01113D

Description of device parameters

Measuring device	Documentation code		
	HART	FOUNDATION Fieldbus	PROFIBUS PA
Proline Promass 200	GP01010D	GP01030D	GP01029D

Supplementary device-dependent documentation

Safety instructions

Content	Documentation code
ATEX/IECEx Ex i	XA00144D
ATEX/IECEx Ex d	XA00143D
ATEX/IECEx Ex nA	XA00145D
cCSAus IS	XA00151D
cCSAus XP	XA00152D
INMETRO Ex i	XA01300D
INMETRO Ex d	XA01305D
INMETRO Ex nA	XA01306D
NEPSI Ex i	XA00156D
NEPSI Ex d	XA00155D
NEPSI Ex nA	XA00157D

Special Documentation

Content	Documentation code
Information on the Pressure Equipment Directive	SD01614D
Functional Safety Manual	SD00147D
Display and operating module FHX50	SD01007F

Content	Documentation		
	HART	FOUNDATION Fieldbus	PROFIBUS PA
Heartbeat Technology	SD01849D	SD01848D	SD01850D

Installation Instructions

Contents	Documentation code
Installation Instructions for spare part sets	Specified for each individual accessory

Registered trademarks

HART®
Registered trademark of the FieldComm Group, Austin, Texas, USA

PROFIBUS®
Registered trademark of the PROFIBUS User Organization, Karlsruhe, Germany

FOUNDATION™ Fieldbus
Registration-pending trademark of the FieldComm Group, Austin, Texas, USA

TRI-CLAMP®
Registered trademark of Ladish & Co., Inc., Kenosha, USA

Applicator®, FieldCare®, DeviceCare ®, Field Xpert™, HistoROM®, Heartbeat Technology™
Registered or registration-pending trademarks of the Endress+Hauser Group

71505583

www.addresses.endress.com

Endress+Hauser

People for Process Automation